ICC-ES Evaluation Report

ESR-2089

Reissued September 2025

Revised July 2026

This report remains under an active continuous compliance program through the end of September 2027

This report also contains:

- **City of LA Supplement**
- **CA Supplement**
- **FL Supplement w/ HVHZ**

ICC-ES Evaluation Reports are not to be construed as representing aesthetics or any other attributes not specifically addressed, nor are they to be construed as an endorsement of the subject of the report or a recommendation for its use. There is no warranty by ICC Evaluation Service, LLC, express or implied, as to any finding or other matter in this report, or as to any product covered by the report.

Copyright © 2026 ICC Evaluation Service, LLC. All rights reserved.

DIVISION: 05 00 00—METALS Section: 05 40 00—Cold-Formed Metal Framing DIVISION: 06 00 00—WOOD, PLASTICS AND COMPOSITES Section: 06 12 19—Shear Wall Panels	REPORT HOLDER: MITEK® INC.	EVALUATION SUBJECT: HARDY FRAME® SHEAR WALL PANEL COMPONENTS	

1.0 EVALUATION SCOPE

Compliance with the following codes:

- 2024, 2021, 2018, 2015 and 2012 *International Building Code®* (IBC)
- 2024, 2021, 2018, 2015 and 2012 *International Residential Code®* (IRC)

Property evaluated:

- Structural

2.0 USES

Hardy Frame® Shear Wall Panel Components include the ***Hardy Frame®*** Panel, ***Hardy Frame®*** Brace Frame, ***Hardy Frame®*** Post, ***Hardy Frame®*** Bearing Plate, ***Hardy Frame®*** Saddle and the ***Hardy Frame®*** Filler Brace. ***Hardy Frame®*** Shear Wall Panel Components are steel components intended to resist vertical (gravity) loads and horizontal in-plane or out-of-plane wind or earthquake loads in wood-framed or cold-formed steel (CFS) light-framed construction. The panels, frames and components are an alternative type of construction to conventional wood frame and CFS frame construction, permitted in Chapters 22 and 23 of the IBC and Chapter 6 of the IRC. The panels, frames and components are limited to use within light-framed wood or CFS construction complying with the code. Installations include concrete or masonry foundations, raised or upper wood floors, and portal frames. The ***Hardy Frame®*** Panels and Brace Frames may be used under the IRC when either an engineered design is provided in accordance with Section R301.1.3 of the IRC or installation complies with Section 4.2 of this report.

3.0 DESCRIPTION

3.1 *Hardy Frame®* Panel and *Hardy Frame®* Brace Frame:

3.1.1 General: The ***Hardy Frame®*** Panel and ***Hardy Frame®*** Brace Frame are prefabricated vertical and lateral force–resisting products for use in wood and CFS light-frame construction. Both product types are designed to resist in-plane and out-of-plane lateral wind or earthquake loading while supporting vertical gravity loads. When used within a seismic force-resisting system (SFRS) defined as Item A.16 or A.17 in Table 12.2-1 of ASCE 7-22 (Item A.15 or A.16 in Table 12.2-1 of ASCE/SEI 7-16 and ASCE/SEI 7-10), the Panel and

Braced Frame Assemblies, including the anchor bolts, are identified as being the designated energy dissipating mechanism (DEDM). The anchorage into the concrete foundation, connection to the top track and cold-formed steel top track (collector) are Capacity Protected Components. See Figure 3 Detail 2/P-BF. The ***Hardy Frame®*** Panel is a one-piece, CFS, C-shaped panel that is enclosed at the top and bottom with steel channels as described in the approved quality documentation. For 18 to 24-inch panel widths, an Alternative Profile Panel shape is also produced, which has a similar one-piece "C" shape identified with additional bends and thicker CFS profiles (10 gage). The ***Hardy Frame®*** Panel in Balloon Wall applications consist of two Panels that are stacked in a continuous one piece, shop-welded or field-bolted assembly at the top to bottom channel interface. The ***Hardy Frame®*** Brace Frame is a rectangular CFS frame with a single diagonal member and CFS vertical studs spaced at 16 inches (406 mm) on center as described in the approved quality documentation.

3.1.2 *Hardy Frame®* Panel and Brace Frame HFX and HFX/S Series: The ***Hardy Frame®*** HFX series panels and brace frames are intended for single or multi-story wood frame construction with net heights that are typically equal to standard wood stud heights, except for the 9 inch (229 mm) Panel width, which is usually $1^1/_2$ inches (38 mm) greater than a standard wood stud height. The HFX series panels and brace frames may be installed in a cantilevered condition over concrete, or masonry foundations, raised wood floors, wood, or steel beams, and may be stacked up to two stories when the lower story is placed on a rigid base, such as a concrete foundation. However, when similarly installed using a HFX series panel that has been fabricated with identical conditions at both the top and bottom of the panel, the panel may be installed in a fixed-fixed condition (moment resistance at top and bottom of the panel) with the top of the panel similarly attached to the underside of a raised or upper wood floor, wood, or steel beam. See Figure 2 Detail 15. The 9 inch (229 mm) Panel widths and Panels in Balloon Wall applications are limited to installation over concrete foundations, masonry foundations or steel beams. The HFX/S series panels and brace frames are intended for use in CFS framing with net heights that typically correspond to standard steel stud heights. HFX/S panel and brace frame installations are provided for first floor conditions only, over a rigid base, such as a concrete foundation. Model numbers, dimensions, and structural design information for both series are provided in Tables 1.0A, 1.0B, 1.1A, 1.2A, 1.3A, 2.1A, and 3.0, and Figure 1 provides product illustrations.

3.2 *Hardy Frame®* Post

3.2.1 General: The ***Hardy Frame®*** Post is prefabricated for use in wood or CFS frame buildings. The ***Hardy Frame®*** Post is a $3^1/_2$-inch-by-$3^1/_4$-inch (89 mm by 82 mm) CFS tube that is enclosed at the top and bottom with CFS channels as described in the approved quality documentation and is designed to resist and transfer both axial tension and axial compression loads.

3.2.2 *Hardy Frame®* Post HFP Series and *Hardy Frame®* Post HFP/S Series: The ***Hardy Frame®*** Post HFP series is intended for wood-framed construction with net heights that correspond to standard wood stud heights. The ***Hardy Frame®*** Post HFP/S series is intended for use with CFS framing with net heights that correspond to standard CFS stud heights. Model numbers, dimensions, and structural design information for the HFP and HFP/S series are provided in Table 4.1, while Figure 1 provides product illustrations.

3.3 *Hardy Frame®* Bearing Plate:

The ***Hardy Frame®*** Bearing Plate is a flat steel plate that is designed and constructed to increase the bearing area in contact with wood surfaces. The bearing plate may be used above or below ***Hardy Frame®*** Panels. The bearing plates are $3^1/_2$ inches (89 mm) wide and 18, 21, 24, 27 or 30 inches (457, 533, 610, 686 or 762 mm) long, with slots and holes for fasteners. Model numbers and illustrations for the bearing plate are provided in Figure 1.

3.4 Screws:

3.4.1 Wood Screws: Wood screws are for wood-to-wood or steel-to-wood connections. Uses are with the ***Hardy Frame®*** Panel, Brace Frame, Bearing Plate or Saddle as indicated in this report. Screws must be MiTek WS Series (ESR-2761) or equivalent. Screw dimensions, design, and installation requirements must be as indicated in Table 1.0A of this report.

3.4.2 Tapping Screws: The screws used for connecting the ***Hardy Frame®*** panels and brace frames to CFS collector elements or to the ***Hardy Frame®*** Filler Brace must have a minimum nominal tensile strength (P_{ts}) value of 4,000 lbf (17 792 N) and a minimum nominal shear strength (P_{ss}) of 2,000 lbf (8896 N) when tested in accordance with AISI S904, and must comply with the ICC-ES Acceptance Criteria for Tapping Screws Fasteners (AC118) as evidenced by a current ICC-ES evaluation report. See Table 1.0B for reference to tapping screws.

3.5 *Hardy Frame®* Bolt Brace:

The ***Hardy Frame®*** Bolt Brace is a CFS strap that installs at the embed end of Panel hold-down anchors to prevent independent rod sway during the concrete pour. Bolt Braces are provided with the same hold-down centerline spacing as the corresponding Panel with which they are installed.

3.6 *Hardy Frame*® Saddle:

The ***Hardy Frame***® Saddle is a splice connector designed and constructed to transfer only axial compression and axial tension loads. Applications for the saddle include, but are not limited to, wood top plates, engineered floor and roof truss members, headers, beams, studs, and posts.

Hardy Frame® Saddles consist of a one-piece CFS channel with a 3.71-inch-wide (94 mm) web, and $1^1/_2$- and 3-inch-wide (38 and 76 mm) flanges. The saddles are available in lengths of 24 inches and 36 inches (610 mm and 914 mm), with additional details as described in the approved quality documentation. Slots are provided in the web of the ***Hardy Frame***® Saddle to allow for field separation into two L-shapes that may be used for splicing members wider than $3^1/_2$ inches (88.9 mm), or whenever separation may be desirable. Sizes and structural design information for the Saddle are provided in Tables 5.1 and 5.2 of this report. Figure 1 and Detail 38 in Figure 2 provide product illustrations.

3.7 *Hardy Frame*® Filler Brace:

The ***Hardy Frame***® Filler Brace is a connector designed and constructed to transfer shear and moment from the top of the ***Hardy Frame***® **Panel** to a filler for non-standard height wall applications.

Hardy Frame® Filler Braces consist of a one-piece CFS channel with a $3^1/_2$-inch-wide (88.9 mm) web, and 2.93-inch-wide (74.5 mm) flanges. The filler braces are $22^3/_8$-inch-long (568 mm), with additional details as described in the approved quality documentation. Figure 1 and Detail 10 in Figure 2 provide product illustrations.

3.8 Materials:

3.8.1 *Hardy Frame*® Panels, Brace Frames, and Posts: ***Hardy Frame***® Panels (except Alternative Profile Panels), Brace Frames, and Posts are formed from 97-mil-thick (2.5 mm) (No. 12 gage) carbon steel complying with either ASTM A653, Designation SS, Grade 50, Designation HSLAS, Grade 50, or ASTM A1003, Designation ST50H, Grade 50, with a minimum G60 galvanized coating designation. Alternative Profile *Hardy Frame*® Panels are formed from 129-mil-thick (3.3 mm) (No. 10 gage) carbon steel complying with either ASTM A653, Designation SS, Grade 50, Designation HSLAS, Grade 50, or ASTM A1003, Designation ST50H, Grade 50, with a minimum G60 coating designation.

3.8.2 Steel Base Plates: All flat steel plates used in the ***Hardy Frame***® Panels, Brace Frames, and Posts are $^3/_4$-inch-thick (19 mm) carbon steel complying with ASTM A36.

3.8.3 Stiffeners: Panel side stiffeners used on ***Hardy Frame***® Panels are minimum 0.2242-inch-thick (5.7 mm) [No. 4 gage] carbon steel complying with ASTM A36. Z-Stiffeners used on ***Hardy Frame***® Panels are minimum 97 mil thick (2.5 mm) (No. 12 gage) carbon steel complying with either ASTM A653, Designation SS, Grade 50, Designation HSLAS, Grade 50, or ASTM A1003, Designation ST50H, Grade 50, with a minimum G60 galvanized coating designation.

3.8.4 Hold-down Anchors and Rods: High Strength or Standard Hold-down anchors must be used. For use with the tables of this report, the High Strength hold-down anchors must comply with ASTM F1554, Grade 105; or ASTM A193, Grade B7; or ASTM A354, Grade BD. Standard hold-down anchors must comply with ASTM F1554, Grade 36 and may be used as indicated in the design tables of this report. For Braced Wall panel substitutions ASTM F1554 Grade 36 hold-down anchors may be used without substantiating calculations.

Machine nuts connecting the base of the Panel or Brace Frame must be heavy hex type and comply with ASTM A194 Grade 2H. Coupling nuts must comply with the proof stresses and engagement lengths in ASTM A194 and IFI 128. The hardened circular washers used to connect the base of Panel or Brace Frame must comply with ASTM F436. Plate washers used at the embedded end of the High Strength anchor bolts must comply with ASTM A36 or better and are to be double-nutted. The washer sizes must comply with the 16th edition of AISC Steel Construction Manual, Part 14, Table 14-1.

3.8.5 *Hardy Frame*® Bolt Brace: The ***Hardy Frame***® Bolt Brace is formed from 37-mil-thick (2.5 mm) No. 12 gage carbon steel complying with ASTM A653, Designation SS, Grade 50, or ASTM A1003, Designation ST50H, Grade 50 Steel with a minimum G60 galvanized coating designation.

3.8.6 Non-shrink Grout: Required for double-nut installations, non-shrink grout must comply with ASTM C1107 and have a minimum specified compressive strength of 5,000 psi (34.4 MPa) at 28 days. The grout must be prepared in accordance with the manufacturer's instructions. Figure 2 provides illustrations of grout placement.

3.8.7 *Hardy Frame*® Bearing Plate: The ***Hardy Frame***® Bearing Plate is a $^3/_4$-inch-thick (19 mm), hot-rolled, flat steel plate complying with ASTM A36.

3.8.8 ***Hardy Frame®*** **Saddle:** Saddles are formed from 68-mil-thick (1.73 mm) (No. 14 gage) carbon steel complying with either ASTM A653, Designation SS, Grade 50, or ASTM A1003, Designation ST50H, Grade 50, steel, with a minimum G60 galvanized coating designation.

3.8.9 ***Hardy Frame®*** **Filler Brace:** ***Hardy Frame®*** Filler Braces are formed from 68-mil-thick (1.73 mm) (No. 14 gage) carbon steel complying with either ASTM A653, Designation SS, Grade 50, or ASTM A1003, Designation ST50H, Grade 50, steel, with a minimum G90 galvanized coating designation.

4.0 DESIGN AND INSTALLATION

4.1 Design:

4.1.1 General: The allowable values described in this report for ***Hardy Frame®*** Panels and Brace Frames are reported at Allowable Stress Design (ASD) level and do not include a one-third stress increase for short-term loading. Tabulated values for ***Hardy Frame®*** Panels apply to panel types described in Section 3.1.1. The allowable in-plane lateral shear concurrently applied axial compression, and corresponding lateral drift and uplift values for both wind and seismic loads are presented in Tables 1.1A, 1.2A, 1.3A, and 2.1A of this report. The lateral shear-resisting assemblies described in this evaluation report are subjected to only one short-term load type at a time (seismic or wind). Structural capacities and drift values shown in these tables include evaluation of bearing stresses on the supporting base and/or top attached materials for the conditions described in the tables of this report and do not require further evaluation by the building design professional. The allowable out-of-plane loads are presented in Table 3.0 of this Report. For balloon wall applications, out-of-plane loads must be resisted by separate wall elements that are designed and detailed by the building design professional.

Allowable in-plane lateral shear and drift values for Panels and Brace Frames, fabricated with the same configuration but different heights comparing against those listed in the design tables of this report, can be determined by linear interpolation between the corresponding values assigned to panels or brace frames with lower and higher wall heights of the same axial load, and between the corresponding values of the lower and higher axial load of the same Panel or Brace Frame configuration and size. For allowable axial loads less than 1,000 lbf (4450 N), interpolation is not permitted.

Hardy Frame® Panels or Brace Frames may be used within the seismic force-resisting system for structures assigned to Seismic Design Categories (SDCs) A, B, C, D, E, and F, and are permitted to have the same seismic coefficients and factors and structural system limitations including height limits as those of Item A.16 and A.17 of Table 12.2-1 of ASCE/SEI 7-22 under the 2024 IBC (Item A.15 and A.16 of Table 12.2-1 of ASCE/SEI 7-16 under the 2021 and 2018 IBC and of Table 12.2-1 of ASCE/SEI 7-10 under the 2015 and 2012 IBC). Second order (P-delta) effects on Panel and Brace Frame boundary elements for vertical loads, which may be gravity loads or overturning effect from in-plane lateral shear acting on the story above, greater than those shown in the applicable tables in this report must be analyzed by the building design professional. When the seismic coefficients and factors assigned to the Panels and Brace Frames, as noted in this section, differ from those of other lateral-force-resisting assemblies installed in the same structure, structural design and construction must comply with IBC Section 1604.4 and ASCE/SEI 7 Sections 12.2.2 through 12.2.4. Where ***Hardy Frame®*** Panels or Brace Frames are installed in structures with flexible diaphragms as determined in accordance with Section 12.3.1 of ASCE/SEI 7-16 or ASCE/SEI 7-22, the value of Ω_0 may be reduced in accordance with Footnote b, of Table 12.2-1 in ASCE/SEI 7 (Footnote g of Table 12.2-1 in ASCE/SEI 7-10).

Hardy Frame® Panels or Brace Frames installed in detached one- and two-story family dwellings in Seismic Design Category A, B, or C in accordance with IBC Section 1613.1 Exception 1, may be designed using allowable values corresponding to wind. Under the 2021, 2018, 2015 and 2012 IBC, ***Hardy Frame®*** Panels or Brace Frames may also be designed using allowable values corresponding to wind when located where mapped short-period spectral response acceleration (S_s) is less than 0.4g in accordance with 2021, 2018, 2015 and 2012 IBC Section 1613.1 Exception 1,

The building height is limited to a maximum of 65 feet (19.8 m) for structures located in Seismic Design Category D, E, or F, or as limited in Tables 504.3 and 504.4 of the IBC (Table 503 of the 2012 IBC), whichever is more restrictive.

Hardy Frame® Panels and Brace Frames used as vertically cantilevered lateral force-resisting elements (moment resisting fixed connection at one of the elements) may be stacked up to two stories in wood light frame construction only as described in Section 3.1.2 of this report. The cumulative in-plane lateral shear loads, and overturning moments must be considered as per the sample calculation in Figure 6, Example 2 of this report.

For the purpose of transferring shear and moment forces ***Hardy Frame®*** Panels and Brace Frames may be connected to wood or steel structural members above and/or below. When installed as a cantilevered element with one end having a fixed connection transferring forces to wood, Table 1.3A applies. When one end having a fixed connection transfers forces to steel, Table 1.1A, 4,000 psi concrete values apply.

When installed with a fixed, moment resisting connection at both ends (fixed-fixed) transferring forces to wood, Table 1.3A capacities apply to both ends simultaneously. When installed with a fixed, moment resisting connection at both ends transferring forces to steel, Table 1.1A, 4,000 psi concrete values apply to both ends simultaneously.

When installing Panels as a cantilevered element, a $^3/_4$ inch (19 mm) steel bar is manufactured inside the channel at the fixed end. When installing Panels with both ends fixed, the $^3/_4$ inch (19 mm) steel bar is manufactured inside the channel at both ends.

Standard Brace Frame manufacturing includes components to enable fixed-fixed installations.

For the complete lateral force-resisting system, including system strength and drift, the building design professional must consider the effects of the strength and stiffness of the support beam conditions, and attachments.

Figure 1 provides information on Panel and Brace Frame manufacturing. Figure 2 Details 15 and 16 illustrate Panel installations.

Where ***Hardy Frame®*** Panels or Brace Frames of the same height, but different widths, are placed in the same wall line, the applied lateral shear loads must be proportioned based on relative lateral stiffness (see Figure 6, Example 1 of this Report). The lateral stiffness of ***Hardy Frame®*** Panels and Brace Frames must be calculated by dividing the tabulated allowable in-plane lateral shear by the tabulated drift at this value. Where Panels or Brace Frames are combined in the same wall line with other types of lateral-force-resisting systems, applied lateral shear loads must be proportioned based on relative lateral stiffness of the resisting elements. Combination with other lateral-force–resisting systems of unknown stiffness is prohibited. Calculations proportioning design lateral loads, based on the known stiffness, must be prepared by a building design professional, and submitted to the code official for approval. Panels and Brace Frames may be installed edge-to-edge, and with justification of anchorage, they may be installed back-to-back. Edge-to-edge installations may include different size products, in which case the design lateral loads must be proportioned based on relative stiffness. When two or more identical Panels or Brace Frames of the same stiffness are used in an edge-to-edge installation, the allowable design value of the system is equal to the sum of the corresponding allowable design values for each individual Panel or Brace Frame. Development of a continuous load path, including collector and foundation design must be the responsibility of the building design professional.

Illustrative framing details are included as guidance for wood-framed construction in Figure 2, and for CFS framed construction in Figure 3. For Panels or Brace Frames attached directly to the horizontal lateral force-resisting element above, and to the horizontal lateral force-resisting element or foundation below, the tabulated values in Table 1.1A, 1.2A, 1.3A or 2.1A, must be applied to the corresponding details in Figures 2 and 3, with the details matching the descriptions for supporting conditions in footnotes of Table 1.1A, 1.2A, 1.3A or 2.1A, as applicable. For those details in Figures 2 and 3, which include additional components and/or connections between the top of the panels/frames and the horizontal lateral force-resisting element above, and/or a flexible support at the base, the strength and drift values of the complete lateral force-resisting system must be determined by the building design professional. The building design professional must consider how the strength and stiffness of the complete lateral force-resisting system is affected by: (1) the inclusion of additional components/connections between the top of the panel/frame and the horizontal lateral force-resisting element, and (2) the effect of a flexible support at the bottom of the panel/frame. For detail 2 of Figure 2, straps at top of panels/frames, if used, are not used to provide moment connections, do not change the required connections at the base of the panels/frames, and do not change the tabulated strength and drift values of the panels/frames, including allowable in-plane lateral shear, drift and uplift values corresponding to allowable in-plane shear. The building design professional must prepare engineering design and construction details to accommodate a specific job situation, in accordance with the applicable code and the requirements of this report, subject to the approval of the code official.

4.1.2 *Hardy Frame®* Panels or Brace Frames on Foundations: For ASD in-plane lateral shear values of ***Hardy Frame®*** Panels or Brace Frames on concrete or masonry foundations and on washers over nuts, Tables 1.1A and 2.1A apply. For ***Hardy Frame®*** Panels supported on foundations and subjected to combined allowable in-plane lateral shear and concurrently applied axial compression loads, the Tension (uplift) load in the hold-down anchor must be calculated using equations provided in Figure 5 of this report. For ***Hardy Frame®***

Brace Frames the Tension (uplift) load in the hold-down anchor may be determined as set forth in the footnote in the design tables. Information on anchorage to foundations is found in Sections 4.1.5 and 4.1.6 of this report.

4.1.3 *Hardy Frame*® Panels or Brace Frames on Raised and Upper Floors: For ASD in-plane lateral shear values of ***Hardy Frame***® Panels or Brace Frames on raised or upper floors in wood-framed construction, Table 1.2A or 1.3A applies, respectively. For ***Hardy Frame***® Panels and Brace Frames the Tension (uplift) load in the hold-down anchor must be calculated in accordance with the design tables. For these tables to be used, a ***Hardy Frame***® Bearing Plate must be installed beneath the panels where indicated in the table footnotes. The system consisting of the Panel or Brace Frame, raised floor, wood floor, lower panel or brace frame and foundation must be analyzed and detailed to provide a complete, continuous load path capable of transferring loads from the point of origin to the load-resisting elements. This task is the responsibility of the building design professional and must be performed to the satisfaction of the code official. Anchor bolts connecting the Panel or Brace Frame to the supporting structure must be limited to resisting tension loads only. Compression and lateral shear loads must be resisted by other load-resisting elements as determined by design. Refer to Section 4.1.1 for additional information.

4.1.4 Screw Fastenings: Tabulated wood screw quantities in Table 1.0A for resisting the allowable in-plane wind and seismic loads utilize a load duration factor, C_D, of 1.6 for wood framed construction in accordance with the ANSI/AWC NDS. When panels are used in fixed-fixed condition, top and bottom screw quantities in Table 1.0A must be doubled. Screw connections in ***Hardy Frame***® Panels may be used to resist ASD tension (uplift) forces resulting from wind. In wood-framed construction, the ASD withdrawal, W, may be computed using the values in ESR-2761 for the WS Series, or the building design professional may compute withdrawal values in accordance with the ANSI/AWC NDS for other screw types.

In CFS-framed construction, Table 1.0B provides tabulated screw quantities for resisting the allowable in-plane wind and seismic loads. The ASD tension, T, may be computed by Eq-1:

$T = 105\ n$ (lbf) Eq-1
or

$T = 465\ n$ (N)
where:

n = number of screws.

Eq-1 requires three exposed threads through 43-mil-thick (1.1 mm) (No. 18 gage) minimum base-steel thickness. The nominal screw diameter must be $^1/_4$ inch (6.4 mm). The screw head diameter must be a minimum of $^5/_{16}$ inch (7.94 mm), unless a washer measuring $^5/_{16}$ inch (7.94 mm) in diameter by 0.05 inch (1.27 mm) thick is placed under the screw head. All of the screws must be uniformly spaced along the length of the channel. When the screws are subjected to combined shear and withdrawal loads, the building design professional must calculate the fastener capacity in accordance with the ANSI/AWC NDS Section 12.4.1 (ANSI/AWC NDS-12 Section 11.4.1 for the 2012 IBC) for connections to wood and in accordance with AISI S100 for connections to steel.

4.1.5 Anchorage to Concrete: Anchorage to concrete for ***Hardy Frame***® Panels or Brace Frames must be designed and installed to resist tension and shear loads, as applicable, in accordance with IBC Sections 1901.3 and 1905 (2012 IBC Sections 1905.1 and 1909), which reference and modify ACI 318. Foundation design must address requirements in Sections 4.1.1 and 4.1.2 of this report. The ***Hardy Frame***® anchorage details in Figure 4 comply with the IBC. For anchorage requirements, Figure 4 provides concrete anchorage dimensions and supplemental shear tie requirements. Figure 4: 1A-FDN provides anchorage details that are applicable to the tabulated allowable in-plane lateral shear and uplift values in Table 1.1A. Anchorage-to-concrete details, shown in Figure 4: 1A-FDN, which are used for seismic resistance, comply with the ductile attachment requirements of ACI 318-19 Section 17.10 (ACI 318-14 Section 17.2.3 and ACI 318-11 Section D.3.3). For anchorage details not addressed in Figure 4, the building design professional must design the hold-down anchorage to accommodate the specific condition and critical load demand in accordance with the provisions of the applicable code. Shear tie design as shown in Figure 4 of this report is not required for installations on wood floors, interior foundation applications (panels or brace frames installed away from edge of concrete), or Braced Wall panel applications per IRC or Section 2308.10 of the 2024 IBC (Section 2308.6 of the 2021, 2018 and 2015 IBC, Section 2308.9.3 of the 2012 IBC). As an alternative, the building design professional may calculate and detail alternative anchorage solutions for specific conditions in accordance with Chapter 19 of the IBC.

4.1.6 Anchorage to Masonry: Cast-in-place anchorage to masonry foundations or walls for ***Hardy Frame***® Panels or Brace Frames described in this report must be designed and detailed by a building design professional in accordance with Chapter 21 of the IBC.

4.1.7 Connection to Steel Supports: Connections to steel beams for ***Hardy Frame®*** Panels or Brace Frames described in this report must be designed and detailed by a building design professional in accordance with Chapter 22 of the IBC. Refer to Section 4.1.1 for additional information.

4.1.8 Portal Frame System: Any ***Hardy Frame®*** Panel or Brace Frame may be used in a single, double, or multiple bay portal frame system. When two or more identical Panels or Brace Frames of the same size are used, the ASD allowable design load of the system is equal to the sum of the corresponding allowable design loads for each individual Panel or Brace Frame. When different size Panels and/or Brace Frames are used in the same line of a wall, the applied load must be proportionately distributed to each frame based on relative lateral stiffness. Section 4.1.1 provides more information on proportioning loads. The portal frame system must be designed and detailed by the building design professional in accordance with the applicable code.

4.1.9 ASD Hardy Frame® Saddle Values: The ASD axial tension and compression values of the Saddle are described in Tables 5.1 and 5.2.

4.1.10 Hardy Frame® Filler Brace: The tabulated allowable in-plane lateral shear and drift values and the out-of-plane allowable loads are permitted for use with the Filler Brace. The allowable values must correspond to the configuration and size of the connected Panel with the height of the Panel taken as the distance from bottom of the Panel to top of the wood filler. For intermediate heights, use the tabulated values corresponding to the next taller Panel height.

4.2 Braced Wall Panels:

A ***Hardy Frame®*** Panel or a ***Hardy Frame®*** Brace Frame may replace each 4 feet (1219 mm) of braced wall panel length or each alternate bracing panel specified in Section 2308.10 of the 2024 IBC (Section 2308.6 of the 2021, 2018 and 2015 IBC, Section 2308.9.3 of the 2012 IBC), or Section R602.10 of the IRC.

4.3 Installation:

4.3.1 General: All ***Hardy Frame®*** Panels, Brace Frames, and Posts may be installed in one-story or multi-story structures of wood frame or CFS frame with masonry or concrete foundations as described in Sections 3.1, 3.2 and 4.1.1 of this report. Locations of all products must comply with this report and the plans and specifications approved by the code official. Installation details shown in Figures 2 and 3 are intended to provide guidance for certain typical surrounding framing conditions. A building design professional must establish details and specifications, utilizing the ***Hardy Frame®*** products, in accordance with the applicable code and this report, subject to the code official's approval to accommodate specific conditions and critical load combinations specific to the particular structure. The nuts at the bolted base connections must be installed "snug tight" after the application of the dead load above the Panel or Brace Frame and before the structure is enclosed. The snug-tightened condition is the tightness that is attained with a few impacts of an impact wrench or the full effort of an installer using an ordinary spud wrench to bring the plies into firm contact. More than one cycle through the bolt pattern may be required to achieve the snug-tightened connection.

4.3.2 Holes in *Hardy Frame®* Panels and Brace Frames: ***Hardy Frame®*** Panels and Brace Frames are fabricated with holes to allow electrical and mechanical component access. Panels also contain nominally $^1/_4$-inch-diameter (6.4 mm) screw holes in the flanges. The 15-, 18-, 21- and 24-inch-wide (381, 457, 533 and 610 mm) Panels have two 3-inch-diameter (76 mm) holes in the face (web) that accept perpendicular penetrating items. A single 1-inch-diameter (25 mm) hole may be field-installed by others in the upper half of the Panel, provided it is located 4 inches (102 mm) minimum from any edge and, for the 15-, 18-, 21-, and 24-inch (381, 457, 533 and 610 mm) Panel widths, 1 inch (25.4 mm) minimum above or below, but not to the side of, the existing 3-inch-diameter (76 mm) hole.

4.3.3 Installation in Wood-Framed Construction: The tables for ***Hardy Frame®*** HFX Series describe products with net heights that are intended for portal frame installations, installation on concrete with a 2x wood filler above and installation on concrete without requiring a 2x filler above. The shear transfer at the top of the Panel must be accomplished by connecting to a collector with minimum 3-inch-long (76 mm) wood or lag screws to transfer the lateral load to the resisting element. Top connection fasteners include threaded fasteners, when substantiated by design and details, which are subject to the approval of the code official. Height differences between the Panel or Brace Frame and the collector may be resolved by specifying custom heights or by utilizing solid filler pieces above the Panel or Brace Frame. When using a wood filler piece that has a net $1^1/_2$-inch (38 mm) height above the ***Hardy Frame®*** Panel or Brace Frame, the filler piece must be connected with minimum $4^1/_2$-inch-long (114 mm) wood screws. The number of screws must be determined for the critical load demand. Larger filler pieces may be used to make up a greater height difference provided all shear transfers, reactions, in-plane drifts, and out-of-plane stability due to in-plane and out-of-plane loading are adequately accounted for by the building design professional. A minimum of four nominally $^1/_4$-inch-

diameter (6.4 mm) holes are provided at Panel edges to facilitate the attachment of "king" studs, when required.

4.3.4 Installation in Cold-formed Steel-Framed Construction: Tables for ***Hardy Frame®*** HFX/S Series products provide ASD values for the products built to CFS stud heights from 96$^5/_8$ inches to 156$^5/_8$ inches (2454 mm to 3987 mm). The shear transfer at the top of the Panel must be accomplished by connections to a collector for the transfer of lateral load to the resisting element. The collector must be minimum 43-mil-thick (1.1 mm) (No. 18 gage) CFS, and fasteners are required to be $^1/_4$-inch-diameter (6.4 mm) self-drilling tapping screws described in an ICC-ES evaluation report issued in accordance with the ICC-ES Acceptance Criteria for Tapping Screw Fasteners (AC118). Filler pieces may be used to make up height differences between the ***Hardy Frame®*** Panel or Brace Frame and the collector, provided all resulting shear transfers, reactions, in-plane drifts, and out-of-plane stability due to in-plane and out-of-plane loading are adequately accounted for by the building design professional. Tabulated values for HFX/S-Series products are provided for installation on concrete or masonry foundations. For installation in CFS framed construction on steel supports see Section 4.1.7 of this Report.

4.3.5 Installation on Concrete or Masonry Foundations: For installation on concrete or masonry foundations, the Panels, Brace Frames, or Posts must be attached at the base with nuts over washers to anchors that are embedded in the concrete or masonry below. The ***Hardy Frame®*** Bolt Brace may be used to position the embedded portion of the anchors. The anchors must be either cast-in types installed either at time of concrete or grout placement; or post-installed mechanical or adhesive types evaluated in a current ICC-ES evaluation report and complying with the building design professional's design. Figure 2 includes details that are applicable to installations directly on concrete or masonry, or a nut and washer.

4.3.6 Installation on Raised and Upper Floor Systems: For installation on solid sawn lumber or engineered wood platform floor systems, a complete and adequate continuous load path must be established to transfer all forces and reactions from ***Hardy Frame®*** Panels, Brace Frames, or Posts to the foundation. The hold-down anchoring methods include, but are not limited to, connecting the base to ***Hardy Frame®*** Panels, ***Hardy Frame®*** Brace Frames, ***Hardy Frame®*** Posts, wood posts, a 4x rim joist, or to a beam located below. The connection may be made with threaded rods or with approved connectors that are screwed or welded to the ***Hardy Frame®*** Panel, Brace Frame, or Post and attached to members below with a connection specified by the building design professional. When through-bolting to the opposing face of a beam, a ***Hardy Frame®*** Bearing Plate or other compression load–distributing device must be installed on the opposing face of the wood member. Anchoring may also be achieved by connecting the panels or frames to the foundation with an extended length of threaded rod for tension loads or in conjunction with wood or steel vertical members for compression loads. The shear transfer at the base of the product must be achieved by attaching the bottom channel to wood members below with $^1/_4$-inch-diameter (6.6 mm) wood screws. The installation of a nominally 4x (minimum) lumber member in the floor system below is required to provide full bearing and to meet required edge distances for the screws to transfer the shear load. For multiple-ply nominally 2x lumber members, installation of additional connectors may be necessary to compensate for decreased screw edge distances. Refer to Sections 4.1.1 and 4.1.3 for additional information.

4.3.7 Installation of *Hardy Frame®* Saddle: The ***Hardy Frame®*** Saddle must be placed over wood members and fastened into both edges and the top or bottom surface, depending on the installation orientation, with fasteners described in Tables 5.1 and 5.2. When the member depth exceeds 3$^1/_2$ inches (89 mm) or framing conditions dictate, the Saddle may be separated into two L-shapes, each attached to one edge and the top or bottom surface of the wood members with the appropriate fasteners.

4.3.8 Installation of *Hardy Frame®* Filler Brace: The Filler Brace must be installed around the edge of Panel and wood filler (3 ½ inches (89 mm) member depth) to lap the hinge location between the top of Panel and bottom of wood filler. The top of the Filler Brace may be offset up to 1 ¾ inches (44 mm) from top of wood filler. The Filler Brace must be fastened to the Panel with ¼-inch (6.6 mm) self-drilling tapping screws (minimum of 5 at each face) and fastened to the wood filler with ¼-inch x 1 ½-inch (6.6 mm x 38 mm) wood screws (fill all holes at each face). See Figure 2, Detail 10.

4.4 Special Inspection:

4.4.1 2024 and 2021 IBC: Periodic special inspection must be provided in accordance with Sections 1705.1.1, 1705.12.1 and 1705.12.2 or Sections 1705.13.2 and 1705.13.3, as applicable, with the exception of those structures that qualify under Section 1704.2, 1704.3, or 1705.3, and subject to approval of the code official.

4.4.2 2018 and 2015 IBC: Periodic special inspection must be provided in accordance with Sections 1705.1.1, 1705.11.1 and 1705.11.2 or Sections 1705.12.2 and 1705.12.3, as applicable, with the exception of those structures that qualify under Section 1704.2, 1704.3, or 1705.3, and subject to approval of the code official.

4.4.3 2012 IBC: Periodic special inspection must be provided in accordance with Sections 1705.1.1, 1705.10.1 and 1705.10.2 or Sections 1705.11.2 and 1705.11.3, as applicable, with the exception of those structures that qualify under Section 1704.2, 1704.3, or 1705.3, and subject to approval of the code official.

4.4.4 IRC: In jurisdictions governed by the IRC, special inspections are not required, except where an engineered design according to Section 301.1.3 of the IRC is used. Where an engineered design is used, special inspections in accordance with Section 4.4 must be provided

5.0 CONDITIONS OF USE:

The ***Hardy Frame***® Brace Frame, ***Hardy Frame***® Panel, ***Hardy Frame***® Post, ***Hardy Frame***® Bearing Plate, ***Hardy Frame***® Saddle, and ***Hardy Frame***® Filler Brace described in this report comply with, or are suitable alternatives to what is specified in, those codes listed in Section 1.0 of this report, subject to the following conditions:

5.1 ***Hardy Frame***® product sizes are limited to the widths and heights set forth in this report, including a maximum of two stories for wood-framed stacked installations, and CFS installations as described in Sections 3.1.2 and 4.1.1 of this report.

5.2 ASD design loads and drifts must not exceed the allowable loads and drifts noted in this report.

5.3 Building design calculations and details, justifying that the use of the Brace Frames, Panels and Posts is in compliance with the code and this evaluation report, must be submitted to the code official for approval, except for braced and alternate braced wall substitutions noted in Section 4.2 of this report. The calculations and details must be prepared by a registered design professional where required by the statutes of the jurisdiction in which the project is to be constructed.

5.4 The Braced Frames and Panels used in exterior walls must be covered with an approved exterior wall covering in accordance with Chapter 14 of the IBC or Chapter 7 of the IRC.

5.5 The ***Hardy Frame***® products must be installed in accordance with this report, the manufacturer's instructions, and the building plans approved by the code official.

5.6 Design of the concrete or masonry foundation system, supporting members for raised and upper floor installation, is beyond the scope of this report. The design must include forces induced by the ***Hardy Frame***® products described in this report.

5.7 The ***Hardy Frame***® Panel, Brace Frame, Post, Bearing Plate, Saddle and Filler Brace, are manufactured under a quality control program at Tolleson, Arizona, with inspections by ICC-ES.

6.0 EVIDENCE SUBMITTED

6.1 ***Hardy Frame***® **Brace Frames, Panels, Posts, Bearing Plates:** Data in accordance with the ICC-ES Acceptance Criteria for Prefabricated, Cold-formed Steel, Lateral-force-resisting Vertical Assemblies (AC322), dated August 2018 (Editorially Revised July 2024).

6.2 ***Hardy Frame***® **Saddle:** Reports of load tests, structural calculations, installation details, and a quality control manual.

6.3 ***Hardy Frame***® **Filler Brace:** Structural calculations, installation details, and a quality control manual.

7.0 IDENTIFICATION

7.1 The ICC-ES mark of conformity, electronic labeling, or the evaluation report number (ICC-ES ESR-2089) or ICC-ES index evaluation report for MiTek (ESR-2685) along with the name, registered trademark, or registered logo of the report holder must be included in the product label.

7.2 In addition, ***Hardy Frame***® Panels, Brace Frames, Posts, Bearing Plates, Saddles and Filler Brace are identified by labels bearing the manufacturer's name address, product name, model number. The label shall be visible after the wall is installed.

7.3 The report holder's contact information is the following:

MITEK® INC.
16023 SWINGLEY RIDGE ROAD
CHESTERFIELD, MISSOURI 63017
www.mitek-us.com
www.hardyframe.com

ICC-ES® Most Widely Accepted and Trusted

TABLE 1.0A--*Hardy Frame*® HFX-SERIES - DIMENSIONS & CONNECTORS

Model Number	Net Height (in)	Width (in)	Depth (in)	HD Dia [1] (in)	Top Screw Qty [2, 3] (ea)	Bottom Screw Qty [2, 4] (ea)
HFX-9x79.5	79 1/2	9	3 1/2	1 1/8	5	n/a
HFX-12x78	78	12			6	6
HFX-15x78		15			8	8
HFX-18x78		18			10	10
HFX-21x78		21			12	12
HFX-24x78		24			14	14
HFX-9x8	93 3/4	9	3 1/2	1 1/8	5	n/a
HFX-12x8	92 1/4	12			6	6
HFX-15x8		15			8	8
HFX-18x8		18			10	10
HFX-21x8		21			12	12
HFX-24x8		24			14	14
HFX-32x8		32		7/8	10	10
HFX-44x8		44			14	14
HFX-12x9	104 1/4	12	3 1/2	1 1/8	6	6
HFX-15x9		15			8	8
HFX-18x9		18			10	10
HFX-21x9		21			12	12
HFX-24x9		24			14	14
HFX-32x9		32		7/8	10	10
HFX-44x9		44			14	14
HFX-12x10	116 1/4	12	3 1/2	1 1/8	6	6
HFX-15x10		15			8	8
HFX-18x10		18			10	10
HFX-21x10		21			12	12
HFX-24x10		24			14	14
HFX-32x10		32		7/8	10	10
HFX-44x10		44			14	14
HFX-15x11	128 1/4	15	3 1/2	1 1/8	8	8
HFX-18x11		18			10	10
HFX-21x11		21			12	12
HFX-24x11		24			14	14
HFX-32x11		32		7/8	10	10
HFX-44x11		44			14	14
HFX-15x12	140 1/4	15	3 1/2	1 1/8	8	8
HFX-18x12		18			10	10
HFX-21x12		21			12	12
HFX-24x12		24			14	14
HFX-32x12		32		7/8	10	10
HFX-44x12		44			14	14
HFX-15x13	152 1/4	15	3 1/2	1 1/8	8	8
HFX-18x13		18			10	10
HFX-21x13		21			12	12
HFX-24x13		24			14	14
HFX-32x13		32		7/8	10	10
HFX-44x13		44			14	14
HFX-15x14	164 1/4	15	3 1/2	1 1/8	8	n/a
HFX-18x14		18			10	
HFX-21x14		21			12	
HFX-24x14		24			14	
HFX-15x15	176 1/4	15	3 1/2	1 1/8	8	n/a
HFX-18x15		18			10	
HFX-21x15		21			12	
HFX-24x15		24			14	
HFX-15x16	188 1/4	15	3 1/2	1 1/8	8	n/a
HFX-18x16		18			10	
HFX-21x16		21			12	
HFX-24x16		24			14	
HFX-15x17	200 1/4	15	3 1/2	1 1/8	8	n/a
HFX-18x17		18			10	
HFX-21x17		21			12	
HFX-24x17		24			14	
HFX-15x18	212 1/4	15	3 1/2	1 1/8	8	n/a
HFX-18x18		18			10	
HFX-21x18		21			12	
HFX-24x18		24			14	
HFX-15x19	224 1/4	15	3 1/2	1 1/8	8	n/a
HFX-18x19		18			10	
HFX-21x19		21			12	
HFX-24x19		24			14	
HFX-15x20	236 1/4	15	3 1/2	1 1/8	8	n/a
HFX-18x20		18			10	
HFX-21x20		21			12	
HFX-24x20		24			14	

For **SI:** 1 inch = 25.4 mm, 1 lbf = 4.45 N

Notes

1) Hold Down (HD) rods can be Standard (STD) or High Strength (HS). STD indicates bolts complying with ASTM F1554 Grade 36. HS indicates bolts complying with a high strength steel specification as set forth in Section 3.8.4 of this report.
2) The calculated screw quantities in this table are based on a 0.105 inch (No. 12 gage) thick steel to wood (specific gravity of 0.50 or greater) connection ($^1/_4$" x 3" long wood screws), including a 1.6 duration of load factor increase. Screws are WS-Series (ESR-2761) or equal (418 lb minimum design lateral load excluding any duration of load stress increase).
3) When installing a 2x wood filler piece with a specific gravity of 0.50 or greater at the top connection the minimum screw length must be $4^1/_2$ inches.
4) Bottom screw length must be minimum of $4^1/_2$ inches at Panel and Brace Frame connections and minimum of 3-inches at Hardy Frame® Bearing Plate.

ICC-ES® Most Widely Accepted and Trusted

TABLE 1.0B--*Hardy Frame*® HFX/S-SERIES - DIMENSIONS & CONNECTORS

Model Number	Net Height (in)	Width (in)	Depth (in)	HD Dia [1] (in)	Top Screw Qty [2, 3] (ea)
HFX/S-9x8	96 5/8	9	3 1/2	1 1/8	5
HFX/S-12x8		12			6
HFX/S-15x8		15			8
HFX/S-18x8		18			12
HFX/S-21x8		21			18
HFX/S-24x8		24			22
HFX/S-32x8		32		7/8	10
HFX/S-44x8		44			16
HFX/S-12x9	108 5/8	12	3 1/2	1 1/8	6
HFX/S-15x9		15			8
HFX/S-18x9		18			12
HFX/S-21x9		21			16
HFX/S-24x9		24			20
HFX/S-32x9		32		7/8	9
HFX/S-44x9		44			14
HFX/S-12x10	120 5/8	12	3 1/2	1 1/8	6
HFX/S-15x10		15			8
HFX/S-18x10		18			10
HFX/S-21x10		21			14
HFX/S-24x10		24			18
HFX/S-32x10		32		7/8	9
HFX/S-44x10		44			12
HFX/S-15x11	132 5/8	15	3 1/2	1 1/8	6
HFX/S-18x11		18			10
HFX/S-21x11		21			14
HFX/S-24x11		24			16
HFX/S-32x11		32		7/8	8
HFX/S-44x11		44			11
HFX/S-15x12	144 5/8	15	3 1/2	1 1/8	6
HFX/S-18x12		18			10
HFX/S-21x12		21			12
HFX/S-24x12		24			16
HFX/S-32x12		32		7/8	7
HFX/S-44x12		44			11
HFX/S-15x13	156 5/8	15	3 1/2	1 1/8	6
HFX/S-18x13		18			10
HFX/S-21x13		21			12
HFX/S-24x13		24			14
HFX/S-32x13		32		7/8	7
HFX/S-44x13		44			11

For **SI**: 1 inch = 25.4 mm, 1 lbf = 4.45 N

Notes:

[1]Hold Down rods can be Standard (STD) or High Strength (HS). STD indicates bolts complying with ASTM F1554 Grade 36. HS indicates bolts complying with a high strength steel specification as set forth in Section 3.8.4 of this Report.

[2]The No. 14 metal screws must be self-drilling tapping screws with a minimum ASD design lateral load of 302 lbs excluding any duration of load increase and is based on a connection consisting of a minimum 0.105-inch (No. 12 gage) base metal thickness steel in contact with the screw and a minimum 0.048 inch (No. 18 gage) base metal thickness steel not in contact with the screw head. Screws must be referenced in a current ICC-ES Evaluation Report and comply with the requirements in Section 3.4.2 of this Report.

[3]Installed screws must extend through the steel connection a minimum of three exposed threads.

TABLE 1.1A--*Hardy Frame®* INSTALLATION - ON CONCRETE[1,2]

Model Number	Net Height H (in)	Concrete Compressive Strength f'c (psi)	HD Bolt Dia (in) and Grade [6]	Applied Axial Load [3]	Seismic			Wind		
					Allowable In-Plane Shear V [5,7] (lbs)	Drift at V [5] (in.)	Uplift at V [4, 5] (lbs)	Allowable In-Plane Shear V [5,7] (lbs)	Drift at V [5] (in.)	Uplift at V [4, 5] (lbs)
HFX-9x79.5	79 1/2	2,500	1 1/8" STD	2,000	905	0.186	15,510	905	0.186	15,510
		3,000			1,100	0.226	19,220	1,100	0.226	19,220
		4,000			1,350	0.276	21,435	1,350	0.276	21,435
HFX-12x78	78	2,500	1 1/8" STD	1,000	1,750	0.193	19,595	1,750	0.193	19,595
				3,500	1,610	0.178	17,005	1,610	0.178	17,005
				6,500	1,440	0.159	14,325	1,440	0.159	14,325
			1 1/8" HS	1,000	1,750	0.194	19,595	1,750	0.194	19,595
				3,500	1,610	0.179	17,005	1,610	0.179	17,005
				6,500	1,440	0.160	14,325	1,440	0.160	14,325
		3,000	1 1/8" STD	1,000	2,000	0.221	21,575	2,000	0.221	21,575
				3,500	1,970	0.218	21,075	1,970	0.218	21,075
				6,500	1,810	0.200	18,375	1,810	0.200	18,375
			1 1/8" HS	1,000	2,110	0.234	23,750	2,110	0.234	23,750
				3,500	1,970	0.219	21,075	1,970	0.219	21,075
				6,500	1,810	0.201	18,375	1,810	0.201	18,375
		4,000	1 1/8" STD	1,000	2,210	0.245	21,620	2,210	0.244	21,620
				3,500	2,210	0.245	21,615	2,210	0.244	21,620
				6,500	2,210	0.245	21,615	2,210	0.244	21,615
			1 1/8" HS	1,000	2,830	0.314	32,065	2,830	0.314	32,065
				3,500	2,695	0.299	29,275	2,695	0.299	29,275
				6,500	2,530	0.281	26,380	2,530	0.281	26,380
HFX-15x78	78	2,500	1 1/8" STD	1,000	2,425	0.252	21,615	2,425	0.251	21,615
				3,500	2,405	0.251	21,380	2,405	0.250	21,380
				6,500	2,350	0.245	20,560	2,350	0.244	20,560
			1 1/8" HS	1,000	2,855	0.298	31,340	2,855	0.298	31,340
				3,500	2,675	0.279	26,150	2,675	0.279	26,150
				6,500	2,425	0.252	21,625	2,425	0.252	21,625
		3,000	1 1/8" STD	1,000	2,590	0.270	21,620	2,590	0.269	21,620
				3,500	2,590	0.270	21,615	2,590	0.269	21,615
				6,500	2,590	0.270	21,620	2,590	0.269	21,620
			1 1/8" HS	1,000	3,275	0.341	32,885	3,440	0.358	38,195
				3,500	3,265	0.340	32,600	3,265	0.340	32,600
				6,500	3,020	0.315	27,795	3,020	0.315	27,795
		4,000	1 1/8" STD	1,000	2,800	0.292	21,620	2,800	0.290	21,620
				3,500	2,795	0.291	21,590	2,795	0.290	21,590
				6,500	2,785	0.290	21,445	2,785	0.289	21,445
			1 1/8" HS	1,000	3,275	0.341	26,695	4,160	0.433	39,380
				3,500	3,275	0.341	26,695	4,160	0.433	39,380
				6,500	3,275	0.341	26,695	4,160	0.433	39,380
HFX-18x78	78	2,500	1 1/8" STD	1,000	3,050	0.185	19,725	3,195	0.193	21,055
				3,500	3,050	0.185	19,725	3,195	0.193	21,055
				6,500	3,050	0.185	19,725	3,195	0.193	21,055
			1 1/8" HS	1,000	4,425	0.269	39,500	4,425	0.269	39,500
				3,500	4,195	0.255	33,700	4,195	0.255	33,700
				6,500	3,885	0.236	28,745	3,885	0.236	28,745
		3,000	1 1/8" STD	1,000	3,050	0.185	18,635	3,305	0.200	20,645
				3,500	3,050	0.185	18,635	3,305	0.200	20,645
				6,500	3,050	0.185	18,635	3,305	0.200	20,645
			1 1/8" HS	1,000	4,660	0.283	34,455	4,660	0.283	34,455
				3,500	4,660	0.283	34,455	4,660	0.283	34,455
				6,500	4,660	0.283	34,455	4,660	0.283	34,455
		4,000	1 1/8" STD	1,000	3,050	0.185	17,585	3,450	0.209	20,335
				3,500	3,050	0.185	17,585	3,450	0.209	20,335
				6,500	3,050	0.185	17,585	3,450	0.209	20,335
			1 1/8" HS	1,000	4,660	0.283	29,645	4,660	0.283	29,645
				3,500	4,660	0.283	29,645	4,660	0.283	29,645
				6,500	4,660	0.283	29,645	4,660	0.283	29,645
HFX-21x78	78	2,500	1 1/8" STD	1,000	3,805	0.198	19,685	3,805	0.198	19,685
				3,500	3,805	0.198	19,685	3,805	0.198	19,685
				6,500	3,805	0.198	19,685	3,805	0.198	19,685
			1 1/8" HS	1,000	6,005	0.315	40,495	6,230	0.327	44,825
				3,500	6,005	0.315	40,495	6,040	0.317	41,070
				6,500	5,690	0.299	36,045	5,690	0.299	36,045
		3,000	1 1/8" STD	1,000	3,925	0.204	19,585	3,925	0.204	19,585
				3,500	3,925	0.204	19,585	3,925	0.204	19,585
				6,500	3,925	0.204	19,585	3,925	0.204	19,585
			1 1/8" HS	1,000	6,005	0.315	34,645	6,875	0.361	43,835
				3,500	6,005	0.315	34,645	6,800	0.357	42,865
				6,500	6,005	0.315	34,645	6,680	0.351	41,480
		4,000	1 1/8" STD	1,000	4,075	0.212	19,460	4,075	0.212	19,460
				3,500	4,075	0.212	19,460	4,075	0.212	19,460
				6,500	4,075	0.212	19,460	4,075	0.212	19,460
			1 1/8" HS	1,000	6,005	0.315	30,985	7,295	0.383	40,220
				3,500	6,005	0.315	30,985	7,295	0.383	40,220
				6,500	6,005	0.315	30,985	7,295	0.383	40,220

ICC-ES® Most Widely Accepted and Trusted

TABLE 1.1A—*Hardy Frame®* INSTALLATION - ON CONCRETE[1,2,7] (CONTINUED)

Model Number	Net Height H (in)	Concrete Compressive Strength f'c (psi)	HD Bolt Dia (in) and Grade[6]	Applied Axial Load[3]	Seismic			Wind		
					Allowable In-Plane Shear V[5,7] (lbs)	Drift at V[5] (in.)	Uplift at V[4,5] (lbs)	Allowable In-Plane Shear V[5,7] (lbs)	Drift at V[5] (in.)	Uplift at V[4,5] (lbs)
HFX-24x78	78	2,500	1 1/8" STD	1,000	3,830	0.123	15,985	4,345	0.140	18,570
				3,500	3,830	0.123	15,985	4,345	0.140	18,570
				6,500	3,830	0.123	15,985	4,345	0.140	18,570
			1 1/8" HS	1,000	6,990	0.227	35,310	7,605	0.246	40,940
				3,500	6,990	0.227	35,310	7,505	0.243	39,925
				6,500	6,990	0.227	35,310	7,360	0.238	38,515
		3,000	1 1/8" STD	1,000	3,830	0.123	15,565	4,465	0.143	18,540
				3,500	3,830	0.123	15,565	4,465	0.143	18,540
				6,500	3,830	0.123	15,565	4,465	0.143	18,540
			1 1/8" HS	1,000	6,990	0.227	32,375	8,365	0.271	42,200
				3,500	6,990	0.227	32,375	8,335	0.270	41,940
				6,500	6,990	0.227	32,375	8,245	0.267	41,225
		4,000	1 1/8" STD	1,000	3,830	0.123	15,095	4,620	0.148	18,540
				3,500	3,830	0.123	15,095	4,620	0.148	18,540
				6,500	3,830	0.123	15,095	4,620	0.148	18,540
			1 1/8" HS	1,000	6,990	0.227	29,900	8,490	0.275	38,125
				3,500	6,990	0.227	29,900	8,490	0.275	38,125
				6,500	6,990	0.227	29,900	8,490	0.275	38,125
HFX-9x8	93 3/4	2,500	1 1/8" STD	2,000	770	0.258	15,510	770	0.258	15,510
		3,000			935	0.314	19,220	935	0.314	19,220
		4,000			1,040	0.349	18,235	1,145	0.384	21,435
HFX-12x8	92 1/4	2,500	1 1/8" STD	1,000	1,480	0.223	19,595	1,480	0.224	19,595
				3,500	1,365	0.206	17,005	1,365	0.206	17,005
				6,500	1,220	0.184	14,325	1,220	0.184	14,325
			1 1/8" HS	1,000	1,480	0.225	19,595	1,480	0.224	19,595
				3,500	1,365	0.207	17,005	1,365	0.207	17,005
				6,500	1,220	0.185	14,325	1,220	0.185	14,325
		3,000	1 1/8" STD	1,000	1,690	0.255	21,575	1,690	0.256	21,575
				3,500	1,665	0.252	21,075	1,665	0.252	21,075
				6,500	1,530	0.231	18,375	1,530	0.231	18,375
			1 1/8" HS	1,000	1,780	0.271	23,750	1,780	0.271	23,750
				3,500	1,665	0.253	21,075	1,665	0.253	21,075
				6,500	1,530	0.232	18,375	1,530	0.232	18,375
		4,000	1 1/8" STD	1,000	1,870	0.282	21,615	1,870	0.283	21,615
				3,500	1,870	0.282	21,615	1,870	0.283	21,615
				6,500	1,870	0.282	21,615	1,870	0.283	21,615
			1 1/8" HS	1,000	2,145	0.326	26,505	2,390	0.363	32,065
				3,500	2,145	0.326	26,505	2,275	0.346	29,275
				6,500	2,140	0.325	26,380	2,140	0.325	26,380
HFX-15x8	92 1/4	2,500	1 1/8" STD	1,000	2,050	0.311	21,620	2,050	0.309	21,620
				3,500	2,035	0.309	21,380	2,035	0.307	21,380
				6,500	1,990	0.301	20,560	1,990	0.300	20,560
			1 1/8" HS	1,000	2,415	0.366	31,340	2,415	0.366	31,340
				3,500	2,260	0.343	26,150	2,260	0.343	26,150
				6,500	2,050	0.311	21,625	2,050	0.311	21,625
		3,000	1 1/8" STD	1,000	2,190	0.332	21,620	2,190	0.331	21,620
				3,500	2,190	0.332	21,615	2,190	0.331	21,615
				6,500	2,190	0.332	21,615	2,190	0.331	21,615
			1 1/8" HS	1,000	2,660	0.404	30,075	2,910	0.441	38,195
				3,500	2,660	0.404	30,075	2,760	0.419	32,600
				6,500	2,555	0.388	27,795	2,555	0.388	27,795
		4,000	1 1/8" STD	1,000	2,370	0.359	21,620	2,370	0.357	21,620
				3,500	2,370	0.359	21,620	2,370	0.357	21,620
				6,500	2,370	0.359	21,620	2,370	0.357	21,620
			1 1/8" HS	1,000	2,660	0.404	25,250	3,380	0.512	36,500
				3,500	2,660	0.404	25,250	3,380	0.512	36,500
				6,500	2,660	0.404	25,250	3,380	0.512	36,500
HFX-18x8	92 1/4	2,500	1 1/8" STD	1,000	2,695	0.224	20,985	2,750	0.228	21,615
				3,500	2,695	0.224	20,985	2,750	0.228	21,615
				6,500	2,695	0.224	20,985	2,750	0.228	21,615
			1 1/8" HS	1,000	3,740	0.312	39,500	3,740	0.313	39,500
				3,500	3,550	0.296	33,700	3,550	0.297	33,700
				6,500	3,285	0.274	28,745	3,285	0.275	28,745
		3,000	1 1/8" STD	1,000	2,695	0.224	19,710	2,890	0.240	21,600
				3,500	2,695	0.224	19,710	2,880	0.239	21,475
				6,500	2,695	0.224	19,710	2,870	0.238	21,370
			1 1/8" HS	1,000	4,250	0.355	40,280	4,420	0.370	44,815
				3,500	4,250	0.355	40,280	4,295	0.360	41,385
				6,500	4,060	0.339	36,500	4,060	0.340	36,500
		4,000	1 1/8" STD	1,000	2,695	0.224	18,510	3,040	0.252	21,345
				3,500	2,695	0.224	18,510	3,025	0.251	21,230
				6,500	2,695	0.224	18,510	3,010	0.250	21,110
			1 1/8" HS	1,000	4,250	0.355	32,890	4,420	0.370	34,790
				3,500	4,250	0.355	32,890	4,420	0.370	34,790
				6,500	4,250	0.355	32,890	4,420	0.370	34,790

ICC-ES® Most Widely Accepted and Trusted

TABLE 1.1A—*Hardy Frame*® INSTALLATION - ON CONCRETE[1,2] (CONTINUED)

Model Number	Net Height H (in)	Concrete Compressive Strength f'c (psi)	HD Bolt Dia (in) and Grade [6]	Applied Axial Load [3]	Seismic			Wind		
					Allowable In-Plane Shear V [5,7] (lbs)	Drift at V [5] (in.)	Uplift at V [4, 5] (lbs)	Allowable In-Plane Shear V [5,7] (lbs)	Drift at V [5] (in.)	Uplift at V [4, 5] (lbs)
HFX-21x8	92 1/4	2,500	1 1/8" STD	1,000	3,355	0.254	20,795	3,355	0.254	20,795
				3,500	3,355	0.254	20,795	3,355	0.254	20,795
				6,500	3,355	0.254	20,795	3,355	0.254	20,795
			1 1/8" HS	1,000	5,080	0.388	40,495	5,270	0.402	44,825
				3,500	5,080	0.388	40,495	5,105	0.390	41,070
				6,500	4,810	0.368	36,045	4,810	0.368	36,045
		3,000	1 1/8" STD	1,000	3,430	0.260	20,395	3,430	0.260	20,395
				3,500	3,430	0.260	20,395	3,430	0.260	20,395
				6,500	3,430	0.260	20,395	3,430	0.260	20,395
			1 1/8" HS	1,000	5,080	0.388	34,645	5,955	0.455	46,095
				3,500	5,080	0.388	34,645	5,870	0.448	44,690
				6,500	5,080	0.388	34,645	5,740	0.439	42,755
		4,000	1 1/8" STD	1,000	3,555	0.269	20,175	3,555	0.269	20,175
				3,500	3,555	0.269	20,175	3,555	0.269	20,175
				6,500	3,555	0.269	20,175	3,555	0.269	20,175
			1 1/8" HS	1,000	5,080	0.388	30,985	6,170	0.471	40,220
				3,500	5,080	0.388	30,985	6,170	0.471	40,220
				6,500	5,080	0.388	30,985	6,170	0.471	40,220
HFX-24x8	92 1/4	2,500	1 1/8" STD	1,000	3,420	0.151	17,045	3,860	0.171	19,700
				3,500	3,420	0.151	17,045	3,860	0.171	19,700
				6,500	3,420	0.151	17,045	3,860	0.171	19,700
			1 1/8" HS	1,000	5,910	0.263	35,310	6,690	0.298	44,310
				3,500	5,910	0.263	35,310	6,600	0.294	43,035
				6,500	5,910	0.263	35,310	6,460	0.288	41,305
		3,000	1 1/8" STD	1,000	3,420	0.151	16,555	3,960	0.175	19,610
				3,500	3,420	0.151	16,555	3,960	0.175	19,610
				6,500	3,420	0.151	16,555	3,960	0.175	19,610
			1 1/8" HS	1,000	5,910	0.263	32,375	7,175	0.320	43,185
				3,500	5,910	0.263	32,375	7,175	0.320	43,185
				6,500	5,910	0.263	32,375	7,175	0.320	43,185
		4,000	1 1/8" STD	1,000	3,420	0.151	16,020	4,085	0.181	19,500
				3,500	3,420	0.151	16,020	4,085	0.181	19,500
				6,500	3,420	0.151	16,020	4,085	0.181	19,500
			1 1/8" HS	1,000	5,910	0.263	29,900	7,175	0.320	38,100
				3,500	5,910	0.263	29,900	7,175	0.320	38,100
				6,500	5,910	0.263	29,900	7,175	0.320	38,100
HFX-32x8	92 1/4	2,500	7/8" STD	1,000	2,375	0.139	8,945	2,825	0.165	10,630
				3,500	2,160	0.126	8,130	2,160	0.126	8,130
				6,500	1,360	0.080	5,130	1,360	0.080	5,130
			7/8" HS	1,000	3,000	0.176	11,295	3,000	0.176	11,295
				3,500	2,335	0.137	8,795	2,335	0.137	8,795
				6,500	1,540	0.090	5,795	1,540	0.090	5,795
		3,000	7/8" STD	1,000	2,375	0.139	8,945	2,895	0.169	10,910
				3,500	2,375	0.139	8,945	2,480	0.145	9,335
				6,500	1,685	0.098	6,335	1,685	0.098	6,335
			7/8" HS	1,000	3,655	0.214	13,755	3,655	0.214	13,755
				3,500	2,990	0.175	11,255	2,990	0.175	11,255
				6,500	2,190	0.128	8,255	2,190	0.128	8,255
		4,000	7/8" STD	1,000	2,375	0.139	8,945	2,895	0.169	10,910
				3,500	2,375	0.139	8,945	2,880	0.168	10,845
				6,500	2,085	0.122	7,845	2,085	0.122	7,845
			7/8" HS	1,000	4,390	0.257	16,530	4,870	0.285	18,330
				3,500	4,205	0.246	15,830	4,205	0.246	15,830
				6,500	3,410	0.199	12,830	3,410	0.199	12,830
HFX-44x8	92 1/4	2,500	7/8" STD	1,000	2,950	0.094	7,610	3,660	0.117	9,440
				3,500	2,950	0.094	7,610	3,240	0.103	8,365
				6,500	2,080	0.066	5,365	2,080	0.066	5,365
			7/8" HS	1,000	4,510	0.144	11,645	4,510	0.144	11,645
				3,500	3,545	0.113	9,145	3,545	0.113	9,145
				6,500	2,380	0.076	6,145	2,380	0.076	6,145
		3,000	7/8" STD	1,000	2,950	0.094	7,610	3,660	0.117	9,440
				3,500	2,950	0.094	7,610	3,635	0.116	9,385
				6,500	2,475	0.079	6,385	2,475	0.079	6,385
			7/8" HS	1,000	5,490	0.175	14,175	5,490	0.175	14,175
				3,500	4,525	0.144	11,675	4,525	0.144	11,675
				6,500	3,360	0.107	8,675	3,360	0.107	8,675
		4,000	7/8" STD	1,000	2,950	0.094	7,610	3,660	0.117	9,440
				3,500	2,950	0.094	7,610	3,660	0.117	9,440
				6,500	2,950	0.094	7,610	2,965	0.094	7,655
			7/8" HS	1,000	5,655	0.180	14,590	7,375	0.235	19,030
				3,500	5,655	0.180	14,590	6,405	0.204	16,530
				6,500	5,245	0.167	13,530	5,245	0.167	13,530

ICC-ES® Most Widely Accepted and Trusted

TABLE 1.1A—*Hardy Frame*® INSTALLATION - ON CONCRETE[1,2] (CONTINUED)

Model Number	Net Height H (in)	Concrete Compressive Strength f'c (psi)	HD Bolt Dia (in) and Grade [6]	Applied Axial Load [3]	Seismic			Wind		
					Allowable In-Plane Shear V [5,7] (lbs)	Drift at V [5] (in.)	Uplift at V [4, 5] (lbs)	Allowable In-Plane Shear V [5,7] (lbs)	Drift at V [5] (in.)	Uplift at V [4, 5] (lbs)
HFX-12x9	104 1/4	2,500	1 1/8" STD	1,000	1,310	0.248	19,595	1,310	0.248	19,595
				3,500	1,205	0.229	17,005	1,205	0.229	17,005
				6,500	1,080	0.205	14,325	1,080	0.205	14,325
			1 1/8" HS	1,000	1,310	0.250	19,595	1,310	0.250	19,595
				3,500	1,205	0.230	17,005	1,205	0.230	17,005
				6,500	1,080	0.206	14,325	1,080	0.206	14,325
		3,000	1 1/8" STD	1,000	1,475	0.280	21,065	1,495	0.284	21,575
				3,500	1,475	0.280	21,065	1,475	0.280	21,075
				6,500	1,355	0.257	18,375	1,355	0.257	18,375
			1 1/8" HS	1,000	1,575	0.301	23,750	1,575	0.301	23,750
				3,500	1,475	0.282	21,075	1,475	0.282	21,075
				6,500	1,355	0.259	18,375	1,355	0.258	18,375
		4,000	1 1/8" STD	1,000	1,475	0.280	18,515	1,655	0.314	21,615
				3,500	1,475	0.280	18,515	1,655	0.314	21,615
				6,500	1,475	0.280	18,515	1,655	0.314	21,620
			1 1/8" HS	1,000	1,680	0.321	22,085	2,115	0.404	32,065
				3,500	1,680	0.321	22,085	2,015	0.385	29,275
				6,500	1,680	0.321	22,085	1,890	0.361	26,380
HFX-15x9	104 1/4	2,500	1 1/8" STD	1,000	1,815	0.361	21,615	1,815	0.360	21,615
				3,500	1,800	0.359	21,380	1,800	0.357	21,380
				6,500	1,760	0.351	20,560	1,760	0.349	20,560
			1 1/8" HS	1,000	2,135	0.426	31,340	2,135	0.426	31,340
				3,500	2,000	0.399	26,150	2,000	0.399	26,150
				6,500	1,815	0.362	21,625	1,815	0.362	21,625
		3,000	1 1/8" STD	1,000	1,940	0.387	21,620	1,940	0.385	21,620
				3,500	1,940	0.387	21,615	1,940	0.385	21,615
				6,500	1,940	0.387	21,620	1,940	0.385	21,620
			1 1/8" HS	1,000	2,285	0.456	28,390	2,575	0.513	38,195
				3,500	2,285	0.456	28,390	2,440	0.487	32,600
				6,500	2,260	0.451	27,795	2,260	0.451	27,795
		4,000	1 1/8" STD	1,000	2,095	0.418	21,615	2,095	0.416	21,615
				3,500	2,095	0.418	21,615	2,095	0.416	21,615
				6,500	2,095	0.418	21,615	2,095	0.416	21,615
			1 1/8" HS	1,000	2,285	0.456	24,265	2,905	0.579	34,670
				3,500	2,285	0.456	24,265	2,905	0.579	34,670
				6,500	2,285	0.456	24,265	2,905	0.579	34,670
HFX-18x9	104 1/4	2,500	1 1/8" STD	1,000	2,435	0.256	21,615	2,435	0.256	21,615
				3,500	2,435	0.256	21,615	2,435	0.256	21,615
				6,500	2,435	0.256	21,615	2,435	0.256	21,620
			1 1/8" HS	1,000	3,310	0.350	39,500	3,310	0.350	39,500
				3,500	3,140	0.331	33,700	3,140	0.332	33,700
				6,500	2,905	0.307	28,745	2,905	0.307	28,745
		3,000	1 1/8" STD	1,000	2,450	0.258	20,405	2,560	0.269	21,620
				3,500	2,450	0.258	20,405	2,560	0.269	21,615
				6,500	2,450	0.258	20,405	2,560	0.269	21,620
			1 1/8" HS	1,000	3,760	0.397	40,260	3,915	0.414	44,955
				3,500	3,760	0.397	40,260	3,805	0.402	41,385
				6,500	3,595	0.379	36,500	3,595	0.380	36,500
		4,000	1 1/8" STD	1,000	2,450	0.258	19,105	2,715	0.286	21,620
				3,500	2,450	0.258	19,105	2,715	0.286	21,620
				6,500	2,450	0.258	19,105	2,715	0.286	21,620
			1 1/8" HS	1,000	3,760	0.397	32,880	4,210	0.445	38,865
				3,500	3,760	0.397	32,880	4,210	0.445	38,865
				6,500	3,760	0.397	32,880	4,210	0.445	38,865
HFX-21x9	104 1/4	2,500	1 1/8" STD	1,000	3,050	0.304	21,565	3,050	0.304	21,565
				3,500	3,020	0.300	21,255	3,020	0.300	21,255
				6,500	3,010	0.299	21,175	3,010	0.299	21,175
			1 1/8" HS	1,000	4,495	0.451	40,495	4,660	0.468	44,825
				3,500	4,495	0.451	40,495	4,520	0.454	41,070
				6,500	4,260	0.428	36,045	4,260	0.428	36,045
		3,000	1 1/8" STD	1,000	3,155	0.314	21,400	3,155	0.314	21,400
				3,500	3,115	0.310	21,070	3,115	0.310	21,070
				6,500	3,105	0.309	20,965	3,105	0.309	20,965
			1 1/8" HS	1,000	4,495	0.451	34,645	5,270	0.529	46,095
				3,500	4,495	0.451	34,645	5,195	0.522	44,690
				6,500	4,495	0.451	34,645	5,080	0.510	42,755
		4,000	1 1/8" STD	1,000	3,285	0.327	21,220	3,285	0.327	21,220
				3,500	3,240	0.322	20,865	3,240	0.322	20,865
				6,500	3,225	0.321	20,770	3,225	0.321	20,770
			1 1/8" HS	1,000	4,495	0.451	30,985	5,460	0.548	40,220
				3,500	4,495	0.451	30,985	5,460	0.548	40,220
				6,500	4,495	0.451	30,985	5,460	0.548	40,220

ICC-ES® Most Widely Accepted and Trusted

TABLE 1.1A—*Hardy Frame*® INSTALLATION - ON CONCRETE[1,2] (CONTINUED)

Model Number	Net Height H (in)	Concrete Compressive Strength f'c (psi)	HD Bolt Dia (in) and Grade [6]	Applied Axial Load [3]	Seismic			Wind		
					Allowable In-Plane Shear V [5,7] (lbs)	Drift at V [5] (in.)	Uplift at V [4, 5] (lbs)	Allowable In-Plane Shear V [5,7] (lbs)	Drift at V [5] (in.)	Uplift at V [4, 5] (lbs)
HFX-24x9	104 1/4	2,500	1 1/8" STD	1,000	3,140	0.175	17,810	3,525	0.197	20,490
				3,500	3,140	0.175	17,810	3,525	0.197	20,490
				6,500	3,140	0.175	17,810	3,525	0.197	20,490
			1 1/8" HS	1,000	5,230	0.294	35,310	6,015	0.338	45,935
				3,500	5,230	0.294	35,310	5,910	0.332	44,165
				6,500	5,230	0.294	35,310	5,755	0.324	41,850
		3,000	1 1/8" STD	1,000	3,140	0.175	17,270	3,620	0.202	20,380
				3,500	3,140	0.175	17,270	3,620	0.202	20,380
				6,500	3,140	0.175	17,270	3,620	0.202	20,380
			1 1/8" HS	1,000	5,230	0.294	32,375	6,350	0.357	43,195
				3,500	5,230	0.294	32,375	6,350	0.357	43,195
				6,500	5,230	0.294	32,375	6,350	0.357	43,195
		4,000	1 1/8" STD	1,000	3,140	0.175	16,680	3,685	0.206	19,925
				3,500	3,140	0.175	16,680	3,685	0.206	19,925
				6,500	3,140	0.175	16,680	3,685	0.206	19,925
			1 1/8" HS	1,000	5,230	0.294	29,900	6,350	0.357	38,105
				3,500	5,230	0.294	29,900	6,350	0.357	38,105
				6,500	5,230	0.294	29,900	6,350	0.357	38,105
HFX-32x9	104 1/4	2,500	1 1/8" STD	1,000	2,190	0.181	9,320	2,500	0.207	10,630
				3,500	1,910	0.158	8,130	1,910	0.158	8,130
				6,500	1,205	0.100	5,130	1,205	0.100	5,130
			1 1/8" HS	1,000	2,655	0.220	11,295	2,655	0.220	11,295
				3,500	2,065	0.171	8,795	2,065	0.171	8,795
				6,500	1,360	0.113	5,795	1,360	0.113	5,795
		3,000	1 1/8" STD	1,000	2,190	0.181	9,320	2,665	0.221	11,350
				3,500	2,190	0.181	9,320	2,195	0.182	9,335
				6,500	1,490	0.123	6,335	1,490	0.123	6,335
			1 1/8" HS	1,000	3,230	0.268	13,755	3,230	0.268	13,755
				3,500	2,645	0.219	11,255	2,645	0.219	11,255
				6,500	1,940	0.161	8,255	1,940	0.161	8,255
		4,000	1 1/8" STD	1,000	2,190	0.181	9,320	2,665	0.221	11,350
				3,500	2,190	0.181	9,320	2,550	0.211	10,845
				6,500	1,845	0.152	7,845	1,845	0.153	7,845
			1 1/8" HS	1,000	3,885	0.322	16,530	4,310	0.357	18,330
				3,500	3,720	0.308	15,830	3,720	0.308	15,830
				6,500	3,015	0.250	12,830	3,015	0.250	12,830
HFX-44x9	104 1/4	2,500	1 1/8" STD	1,000	2,745	0.121	8,005	3,405	0.151	9,930
				3,500	2,745	0.121	8,005	2,870	0.127	8,365
				6,500	1,840	0.081	5,365	1,840	0.081	5,365
			1 1/8" HS	1,000	3,995	0.177	11,645	3,995	0.177	11,645
				3,500	3,135	0.139	9,145	3,135	0.139	9,145
				6,500	2,105	0.093	6,145	2,105	0.093	6,145
		3,000	1 1/8" STD	1,000	2,745	0.121	8,005	3,405	0.151	9,930
				3,500	2,745	0.121	8,005	3,220	0.142	9,385
				6,500	2,190	0.096	6,385	2,190	0.097	6,385
			1 1/8" HS	1,000	4,860	0.215	14,175	4,860	0.215	14,175
				3,500	4,005	0.177	11,675	4,005	0.177	11,675
				6,500	2,975	0.132	8,670	2,975	0.132	8,670
		4,000	1 1/8" STD	1,000	2,745	0.121	8,005	3,405	0.151	9,930
				3,500	2,745	0.121	8,005	3,405	0.151	9,930
				6,500	2,625	0.116	7,655	2,625	0.116	7,655
			1 1/8" HS	1,000	5,260	0.233	15,340	6,525	0.289	19,030
				3,500	5,260	0.233	15,340	5,670	0.251	16,530
				6,500	4,640	0.206	13,530	4,640	0.205	13,530
HFX-12x10	116 1/4	2,500	1 1/8" STD	1,000	1,175	0.273	19,595	1,175	0.273	19,595
				3,500	1,080	0.252	17,005	1,080	0.252	17,005
				6,500	965	0.225	14,325	965	0.225	14,325
			1 1/8" HS	1,000	1,175	0.274	19,595	1,175	0.275	19,595
				3,500	1,080	0.253	17,005	1,080	0.253	17,005
				6,500	965	0.226	14,325	965	0.226	14,325
		3,000	1 1/8" STD	1,000	1,185	0.276	17,740	1,340	0.313	21,575
				3,500	1,185	0.276	17,740	1,325	0.308	21,075
				6,500	1,185	0.276	17,740	1,215	0.283	18,375
			1 1/8" HS	1,000	1,350	0.316	21,810	1,415	0.331	23,750
				3,500	1,325	0.310	21,075	1,325	0.310	21,075
				6,500	1,215	0.284	18,375	1,215	0.284	18,375
		4,000	1 1/8" STD	1,000	1,185	0.276	16,095	1,485	0.346	21,615
				3,500	1,185	0.276	16,095	1,485	0.346	21,615
				6,500	1,185	0.276	16,095	1,485	0.346	21,620
			1 1/8" HS	1,000	1,350	0.316	19,015	1,900	0.444	32,065
				3,500	1,350	0.316	19,015	1,805	0.423	29,275
				6,500	1,350	0.316	19,015	1,695	0.397	26,380

ICC-ES® Most Widely Accepted and Trusted

TABLE 1.1A—*Hardy Frame*® INSTALLATION - ON CONCRETE[1,2] (CONTINUED)

Model Number	Net Height H (in)	Concrete Compressive Strength f'c (psi)	HD Bolt Dia (in) and Grade [6]	Applied Axial Load [3]	Seismic			Wind		
					Allowable In-Plane Shear V [5,7] (lbs)	Drift at V [5] (in.)	Uplift at V [4, 5] (lbs)	Allowable In-Plane Shear V [5,7] (lbs)	Drift at V [5] (in.)	Uplift at V [4, 5] (lbs)
HFX-15x10	116 1/4	2,500	1 1/8" STD	1,000	1,625	0.414	21,620	1,625	0.412	21,620
				3,500	1,615	0.411	21,380	1,615	0.409	21,380
				6,500	1,580	0.402	20,560	1,580	0.400	20,560
			1 1/8" HS	1,000	1,915	0.488	31,340	1,915	0.488	31,340
				3,500	1,795	0.457	26,150	1,795	0.457	26,150
				6,500	1,625	0.414	21,625	1,625	0.414	21,625
		3,000	1 1/8" STD	1,000	1,740	0.442	21,615	1,740	0.440	21,615
				3,500	1,740	0.442	21,620	1,740	0.440	21,620
				6,500	1,740	0.442	21,615	1,740	0.440	21,615
			1 1/8" HS	1,000	2,000	0.509	27,060	2,310	0.587	38,195
				3,500	2,000	0.509	27,060	2,190	0.557	32,600
				6,500	2,000	0.509	27,060	2,030	0.516	27,795
		4,000	1 1/8" STD	1,000	1,880	0.478	21,620	1,880	0.476	21,620
				3,500	1,880	0.478	21,615	1,880	0.476	21,615
				6,500	1,880	0.478	21,615	1,880	0.476	21,620
			1 1/8" HS	1,000	2,000	0.509	23,435	2,540	0.646	33,185
				3,500	2,000	0.509	23,435	2,540	0.646	33,185
				6,500	2,000	0.509	23,435	2,540	0.646	33,185
HFX-18x10	116 1/4	2,500	1 1/8" STD	1,000	2,185	0.282	21,620	2,185	0.282	21,620
				3,500	2,185	0.282	21,620	2,185	0.282	21,620
				6,500	2,185	0.282	21,615	2,185	0.282	21,615
			1 1/8" HS	1,000	2,970	0.386	39,500	2,970	0.386	39,500
				3,500	2,815	0.366	33,700	2,815	0.366	33,700
				6,500	2,605	0.339	28,745	2,605	0.339	28,745
		3,000	1 1/8" STD	1,000	2,255	0.291	21,110	2,295	0.296	21,620
				3,500	2,255	0.291	21,110	2,295	0.296	21,620
				6,500	2,255	0.291	21,110	2,295	0.296	21,620
			1 1/8" HS	1,000	3,370	0.438	40,205	3,510	0.456	44,955
				3,500	3,370	0.438	40,205	3,410	0.443	41,385
				6,500	3,220	0.419	36,500	3,220	0.419	36,500
		4,000	1 1/8" STD	1,000	2,255	0.291	19,700	2,435	0.314	21,620
				3,500	2,255	0.291	19,700	2,435	0.314	21,615
				6,500	2,255	0.291	19,700	2,435	0.314	21,620
			1 1/8" HS	1,000	3,370	0.438	32,855	4,070	0.529	44,000
				3,500	3,370	0.438	32,855	4,070	0.529	44,000
				6,500	3,370	0.438	32,855	4,070	0.529	44,000
HFX-21x10	116 1/4	2,500	1 1/8" STD	1,000	2,740	0.348	21,615	2,740	0.348	21,615
				3,500	2,740	0.348	21,615	2,740	0.348	21,615
				6,500	2,740	0.348	21,620	2,740	0.348	21,620
			1 1/8" HS	1,000	3,970	0.509	39,075	4,180	0.536	44,825
				3,500	3,970	0.509	39,075	4,055	0.519	41,070
				6,500	3,820	0.489	36,045	3,820	0.489	36,045
		3,000	1 1/8" STD	1,000	2,855	0.362	21,620	2,855	0.362	21,620
				3,500	2,845	0.361	21,545	2,845	0.361	21,545
				6,500	2,835	0.360	21,430	2,835	0.360	21,430
			1 1/8" HS	1,000	3,970	0.509	33,835	4,725	0.606	46,095
				3,500	3,970	0.509	33,835	4,660	0.597	44,690
				6,500	3,970	0.509	33,835	4,555	0.584	42,755
		4,000	1 1/8" STD	1,000	2,975	0.378	21,465	2,975	0.378	21,465
				3,500	2,965	0.376	21,365	2,965	0.376	21,365
				6,500	2,950	0.375	21,260	2,950	0.375	21,260
			1 1/8" HS	1,000	3,970	0.509	30,390	4,895	0.627	40,220
				3,500	3,970	0.509	30,390	4,895	0.627	40,220
				6,500	3,970	0.509	30,390	4,895	0.627	40,220
HFX-24x10	116 1/4	2,500	1 1/8" STD	1,000	2,900	0.199	18,450	3,245	0.222	21,160
				3,500	2,900	0.199	18,450	3,215	0.220	20,910
				6,500	2,900	0.199	18,450	3,200	0.219	20,820
			1 1/8" HS	1,000	4,690	0.325	35,285	5,395	0.373	45,935
				3,500	4,690	0.325	35,285	5,300	0.367	44,165
				6,500	4,690	0.325	35,285	5,165	0.357	41,850
		3,000	1 1/8" STD	1,000	2,900	0.199	17,865	3,335	0.229	21,040
				3,500	2,900	0.199	17,865	3,295	0.226	20,755
				6,500	2,900	0.199	17,865	3,285	0.225	20,660
			1 1/8" HS	1,000	4,690	0.325	32,355	5,695	0.394	43,200
				3,500	4,690	0.325	32,355	5,695	0.394	43,200
				6,500	4,690	0.325	32,355	5,695	0.394	43,200
		4,000	1 1/8" STD	1,000	2,900	0.199	17,230	3,445	0.236	20,895
				3,500	2,900	0.199	17,230	3,400	0.233	20,580
				6,500	2,900	0.199	17,230	3,390	0.232	20,490
			1 1/8" HS	1,000	4,690	0.325	29,885	5,695	0.394	38,110
				3,500	4,690	0.325	29,885	5,695	0.394	38,110
				6,500	4,690	0.325	29,885	5,695	0.394	38,110

ICC-ES® Most Widely Accepted and Trusted

TABLE 1.1A—Hardy Frame® INSTALLATION - ON CONCRETE[1,2] (CONTINUED)

Model Number	Net Height H (in)	Concrete Compressive Strength f'c (psi)	HD Bolt Dia (in) and Grade [6]	Applied Axial Load [3]	Seismic			Wind		
					Allowable In-Plane Shear V [5,7] (lbs)	Drift at V [5] (in.)	Uplift at V [4, 5] (lbs)	Allowable In-Plane Shear V [5,7] (lbs)	Drift at V [5] (in.)	Uplift at V [4, 5] (lbs)
HFX-32x10	116 1/4	2,500	7/8" STD	1,000	2,030	0.230	9,630	2,240	0.254	10,630
				3,500	1,715	0.194	8,130	1,715	0.194	8,130
				6,500	1,080	0.122	5,130	1,080	0.122	5,130
			7/8" HS	1,000	2,380	0.270	11,295	2,380	0.269	11,295
				3,500	1,855	0.210	8,795	1,855	0.210	8,795
				6,500	1,220	0.138	5,795	1,220	0.138	5,795
		3,000	7/8" STD	1,000	2,030	0.230	9,630	2,470	0.280	11,725
				3,500	1,970	0.223	9,335	1,970	0.223	9,335
				6,500	1,335	0.151	6,335	1,335	0.151	6,335
			7/8" HS	1,000	2,900	0.329	13,755	2,900	0.328	13,755
				3,500	2,370	0.269	11,255	2,370	0.268	11,255
				6,500	1,740	0.197	8,255	1,740	0.197	8,255
		4,000	7/8" STD	1,000	2,030	0.230	9,630	2,470	0.280	11,725
				3,500	2,030	0.230	9,630	2,285	0.259	10,845
				6,500	1,655	0.187	7,845	1,655	0.187	7,845
			7/8" HS	1,000	3,485	0.395	16,535	3,865	0.437	18,330
				3,500	3,335	0.378	15,830	3,335	0.378	15,830
				6,500	2,705	0.306	12,830	2,705	0.306	12,830
HFX-44x10	116 1/4	2,500	7/8" STD	1,000	2,570	0.154	8,355	3,185	0.191	10,355
				3,500	2,570	0.154	8,355	2,575	0.154	8,365
				6,500	1,650	0.099	5,365	1,650	0.099	5,365
			7/8" HS	1,000	3,580	0.214	11,645	3,580	0.214	11,645
				3,500	2,810	0.168	9,145	2,810	0.168	9,145
				6,500	1,890	0.113	6,145	1,890	0.113	6,145
		3,000	7/8" STD	1,000	2,570	0.154	8,355	3,185	0.191	10,355
				3,500	2,570	0.154	8,355	2,885	0.173	9,385
				6,500	1,965	0.118	6,385	1,965	0.117	6,385
			7/8" HS	1,000	4,360	0.261	14,175	4,360	0.261	14,175
				3,500	3,590	0.215	11,675	3,590	0.215	11,675
				6,500	2,665	0.160	8,675	2,665	0.160	8,675
		4,000	7/8" STD	1,000	2,570	0.154	8,355	3,185	0.191	10,355
				3,500	2,570	0.154	8,355	3,185	0.191	10,355
				6,500	2,355	0.141	7,655	2,355	0.141	7,655
			7/8" HS	1,000	4,915	0.294	15,980	5,855	0.350	19,030
				3,500	4,915	0.294	15,980	5,085	0.304	16,530
				6,500	4,160	0.249	13,530	4,160	0.249	13,530
HFX-15x11	128 1/4	2,500	1 1/8" STD	1,000	1,475	0.466	21,615	1,475	0.465	21,615
				3,500	1,465	0.463	21,380	1,465	0.462	21,380
				6,500	1,430	0.452	20,560	1,430	0.451	20,560
			1 1/8" HS	1,000	1,735	0.549	31,340	1,735	0.549	31,340
				3,500	1,625	0.515	26,150	1,625	0.515	26,150
				6,500	1,475	0.466	21,625	1,475	0.466	21,625
		3,000	1 1/8" STD	1,000	1,575	0.498	21,620	1,575	0.497	21,620
				3,500	1,575	0.498	21,615	1,575	0.497	21,615
				6,500	1,575	0.498	21,615	1,575	0.497	21,615
			1 1/8" HS	1,000	1,775	0.561	26,090	2,090	0.662	38,195
				3,500	1,775	0.561	26,090	1,985	0.628	32,600
				6,500	1,775	0.561	26,090	1,840	0.581	27,795
		4,000	1 1/8" STD	1,000	1,705	0.539	21,615	1,705	0.538	21,615
				3,500	1,705	0.539	21,620	1,705	0.538	21,620
				6,500	1,705	0.539	21,620	1,705	0.538	21,620
			1 1/8" HS	1,000	1,775	0.561	22,800	2,255	0.713	32,090
				3,500	1,775	0.561	22,800	2,255	0.713	32,090
				6,500	1,775	0.561	22,800	2,255	0.713	32,090
HFX-18x11	128 1/4	2,500	1 1/8" STD	1,000	1,980	0.308	21,615	1,980	0.311	21,615
				3,500	1,980	0.308	21,615	1,980	0.311	21,615
				6,500	1,980	0.308	21,615	1,980	0.311	21,615
			1 1/8" HS	1,000	2,690	0.420	39,500	2,690	0.420	39,500
				3,500	2,550	0.399	33,700	2,550	0.399	33,700
				6,500	2,365	0.369	28,745	2,365	0.369	28,745
		3,000	1 1/8" STD	1,000	2,080	0.324	21,600	2,080	0.327	21,620
				3,500	2,080	0.324	21,600	2,080	0.327	21,615
				6,500	2,080	0.324	21,600	2,080	0.327	21,615
			1 1/8" HS	1,000	2,830	0.442	34,360	2,830	0.442	34,360
				3,500	2,830	0.442	34,360	2,830	0.442	34,360
				6,500	2,830	0.442	34,360	2,830	0.442	34,360
		4,000	1 1/8" STD	1,000	2,080	0.324	20,115	2,210	0.347	21,620
				3,500	2,080	0.324	20,115	2,210	0.347	21,620
				6,500	2,080	0.324	20,115	2,210	0.347	21,620
			1 1/8" HS	1,000	2,830	0.442	29,585	2,830	0.442	29,585
				3,500	2,830	0.442	29,585	2,830	0.442	29,585
				6,500	2,830	0.442	29,585	2,830	0.442	29,585

ICC-ES® Most Widely Accepted and Trusted

TABLE 1.1A—*Hardy Frame*® INSTALLATION - ON CONCRETE[1,2] (CONTINUED)

Model Number	Net Height H (in)	Concrete Compressive Strength f'c (psi)	HD Bolt Dia (in) and Grade [6]	Applied Axial Load [3]	Seismic			Wind		
					Allowable In-Plane Shear V [5,7] (lbs)	Drift at V [5] (in.)	Uplift at V [4, 5] (lbs)	Allowable In-Plane Shear V [5,7] (lbs)	Drift at V [5] (in.)	Uplift at V [4, 5] (lbs)
HFX-21x11	128 1/4	2,500	1 1/8" STD	1,000	2,485	0.393	21,620	2,485	0.393	21,620
				3,500	2,485	0.393	21,615	2,485	0.393	21,615
				6,500	2,485	0.393	21,620	2,485	0.393	21,620
			1 1/8" HS	1,000	3,515	0.561	37,160	3,790	0.605	44,825
				3,500	3,515	0.561	37,160	3,675	0.587	41,070
				6,500	3,460	0.553	36,045	3,460	0.553	36,045
		3,000	1 1/8" STD	1,000	2,585	0.409	21,615	2,585	0.409	21,615
				3,500	2,585	0.409	21,620	2,585	0.409	21,620
				6,500	2,585	0.409	21,620	2,585	0.409	21,620
			1 1/8" HS	1,000	3,515	0.561	32,660	4,285	0.684	46,095
				3,500	3,515	0.561	32,660	4,220	0.674	44,690
				6,500	3,515	0.561	32,660	4,130	0.659	42,755
		4,000	1 1/8" STD	1,000	2,715	0.429	21,620	2,715	0.429	21,620
				3,500	2,715	0.429	21,620	2,715	0.429	21,620
				6,500	2,715	0.429	21,620	2,715	0.429	21,620
			1 1/8" HS	1,000	3,515	0.561	29,505	4,440	0.708	40,220
				3,500	3,515	0.561	29,505	4,440	0.708	40,220
				6,500	3,515	0.561	29,505	4,440	0.708	40,220
HFX-24x11	128 1/4	2,500	1 1/8" STD	1,000	2,695	0.223	19,010	2,975	0.245	21,465
				3,500	2,695	0.223	19,010	2,960	0.244	21,355
				6,500	2,695	0.223	19,010	2,950	0.243	21,250
			1 1/8" HS	1,000	3,730	0.308	28,985	4,890	0.405	45,935
				3,500	3,730	0.308	28,985	4,805	0.398	44,165
				6,500	3,730	0.308	28,985	4,680	0.387	41,850
		3,000	1 1/8" STD	1,000	2,695	0.223	18,385	3,090	0.255	21,605
				3,500	2,695	0.223	18,385	3,045	0.251	21,215
				6,500	2,695	0.223	18,385	3,030	0.250	21,110
			1 1/8" HS	1,000	3,730	0.308	27,245	5,160	0.427	43,175
				3,500	3,730	0.308	27,245	5,160	0.427	43,175
				6,500	3,730	0.308	27,245	5,160	0.427	43,175
		4,000	1 1/8" STD	1,000	2,695	0.223	17,710	3,200	0.264	21,445
				3,500	2,695	0.223	17,710	3,145	0.259	21,055
				6,500	2,695	0.223	17,710	3,135	0.258	20,970
			1 1/8" HS	1,000	3,730	0.308	25,600	5,160	0.427	38,090
				3,500	3,730	0.308	25,600	5,160	0.427	38,090
				6,500	3,730	0.308	25,600	5,160	0.427	38,090
HFX-32x11	128 1/4	2,500	7/8" STD	1,000	1,895	0.285	9,920	2,030	0.306	10,630
				3,500	1,555	0.234	8,130	1,555	0.234	8,130
				6,500	980	0.147	5,130	980	0.148	5,130
			7/8" HS	1,000	2,160	0.325	11,295	2,160	0.325	11,295
				3,500	1,680	0.253	8,795	1,680	0.253	8,795
				6,500	1,105	0.167	5,795	1,105	0.167	5,795
		3,000	7/8" STD	1,000	1,895	0.285	9,920	2,260	0.341	11,835
				3,500	1,785	0.268	9,335	1,785	0.269	9,335
				6,500	1,210	0.182	6,335	1,210	0.182	6,335
			7/8" HS	1,000	2,625	0.395	13,755	2,625	0.395	13,755
				3,500	2,150	0.324	11,255	2,150	0.324	11,255
				6,500	1,575	0.237	8,255	1,575	0.237	8,255
		4,000	7/8" STD	1,000	1,895	0.285	9,920	2,300	0.347	12,050
				3,500	1,895	0.285	9,920	2,070	0.312	10,845
				6,500	1,500	0.225	7,845	1,500	0.226	7,845
			7/8" HS	1,000	2,910	0.438	15,235	3,500	0.527	18,330
				3,500	2,910	0.438	15,235	3,025	0.455	15,830
				6,500	2,450	0.369	12,830	2,450	0.369	12,830
HFX-44x11	128 1/4	2,500	7/8" STD	1,000	2,415	0.191	8,665	2,990	0.236	10,730
				3,500	2,330	0.184	8,365	2,330	0.184	8,365
				6,500	1,495	0.118	5,365	1,495	0.118	5,365
			7/8" HS	1,000	3,245	0.255	11,645	3,245	0.256	11,645
				3,500	2,550	0.201	9,145	2,550	0.201	9,145
				6,500	1,715	0.135	6,145	1,715	0.135	6,145
		3,000	7/8" STD	1,000	2,415	0.191	8,665	2,990	0.236	10,730
				3,500	2,415	0.191	8,665	2,615	0.206	9,385
				6,500	1,780	0.141	6,385	1,780	0.140	6,385
			7/8" HS	1,000	3,950	0.311	14,175	3,950	0.311	14,175
				3,500	3,255	0.256	11,670	3,255	0.256	11,670
				6,500	2,415	0.190	8,675	2,415	0.190	8,675
		4,000	7/8" STD	1,000	2,415	0.191	8,665	2,990	0.236	10,730
				3,500	2,415	0.191	8,665	2,970	0.234	10,655
				6,500	2,135	0.169	7,655	2,135	0.168	7,655
			7/8" HS	1,000	4,155	0.327	14,905	4,875	0.384	17,490
				3,500	4,155	0.327	14,905	4,610	0.363	16,530
				6,500	3,770	0.297	13,530	3,770	0.297	13,530

ICC-ES® Most Widely Accepted and Trusted

TABLE 1.1A—*Hardy Frame*® INSTALLATION - ON CONCRETE[1,2] (CONTINUED)

Model Number	Net Height H (in)	Concrete Compressive Strength f'c (psi)	HD Bolt Dia (in) and Grade [6]	Applied Axial Load [3]	Seismic			Wind		
					Allowable In-Plane Shear V [5,7] (lbs)	Drift at V [5] (in.)	Uplift at V [4, 5] (lbs)	Allowable In-Plane Shear V [5,7] (lbs)	Drift at V [5] (in.)	Uplift at V [4, 5] (lbs)
HFX-15x12	140 1/4	2,500	1 1/8" STD	1,000	1,345	0.521	21,615	1,345	0.520	21,615
				3,500	1,340	0.517	21,380	1,340	0.516	21,380
				6,500	1,310	0.505	20,560	1,310	0.504	20,560
			1 1/8" HS	1,000	1,590	0.614	31,310	1,590	0.614	31,340
				3,500	1,490	0.575	26,150	1,490	0.575	26,150
				6,500	1,350	0.521	21,625	1,350	0.521	21,625
		3,000	1 1/8" STD	1,000	1,440	0.557	21,615	1,440	0.556	21,615
				3,500	1,440	0.557	21,615	1,440	0.556	21,615
				6,500	1,440	0.557	21,620	1,440	0.556	21,620
			1 1/8" HS	1,000	1,590	0.614	25,160	1,915	0.739	38,195
				3,500	1,590	0.614	25,160	1,815	0.701	32,600
				6,500	1,590	0.614	25,160	1,680	0.650	27,795
		4,000	1 1/8" STD	1,000	1,555	0.602	21,620	1,555	0.601	21,620
				3,500	1,555	0.602	21,620	1,555	0.601	21,615
				6,500	1,555	0.602	21,620	1,555	0.601	21,615
			1 1/8" HS	1,000	1,590	0.614	22,165	2,015	0.779	31,020
				3,500	1,590	0.614	22,165	2,015	0.779	31,020
				6,500	1,590	0.614	22,165	2,015	0.779	31,020
HFX-18x12	140 1/4	2,500	1 1/8" STD	1,000	1,810	0.334	21,620	1,810	0.334	21,620
				3,500	1,810	0.334	21,615	1,810	0.334	21,615
				6,500	1,810	0.334	21,620	1,810	0.334	21,620
			1 1/8" HS	1,000	2,460	0.456	39,500	2,460	0.456	39,500
				3,500	2,335	0.432	33,700	2,335	0.432	33,700
				6,500	2,160	0.400	28,745	2,160	0.400	28,745
		3,000	1 1/8" STD	1,000	1,905	0.351	21,615	1,905	0.351	21,615
				3,500	1,905	0.351	21,620	1,905	0.351	21,615
				6,500	1,905	0.351	21,620	1,905	0.351	21,620
			1 1/8" HS	1,000	2,585	0.479	34,295	2,585	0.479	34,295
				3,500	2,585	0.479	34,295	2,585	0.479	34,295
				6,500	2,585	0.479	34,295	2,585	0.479	34,295
		4,000	1 1/8" STD	1,000	1,935	0.357	20,530	2,020	0.373	21,620
				3,500	1,935	0.357	20,530	2,020	0.373	21,620
				6,500	1,935	0.357	20,530	2,020	0.373	21,615
			1 1/8" HS	1,000	2,585	0.479	29,545	2,585	0.479	29,545
				3,500	2,585	0.479	29,545	2,585	0.479	29,545
				6,500	2,585	0.479	29,545	2,585	0.479	29,545
HFX-21x12	140 1/4	2,500	1 1/8" STD	1,000	2,270	0.470	21,620	2,270	0.470	21,620
				3,500	2,270	0.470	21,615	2,270	0.470	21,615
				6,500	2,270	0.470	21,615	2,270	0.470	21,615
			1 1/8" HS	1,000	3,030	0.633	33,190	3,465	0.724	44,825
				3,500	3,030	0.633	33,190	3,360	0.702	41,070
				6,500	3,030	0.633	33,190	3,165	0.661	36,045
		3,000	1 1/8" STD	1,000	2,365	0.490	21,620	2,365	0.490	21,620
				3,500	2,365	0.490	21,615	2,365	0.490	21,615
				6,500	2,365	0.490	21,620	2,365	0.490	21,620
			1 1/8" HS	1,000	3,030	0.633	29,955	3,730	0.779	41,750
				3,500	3,030	0.633	29,955	3,730	0.779	41,750
				6,500	3,030	0.633	29,955	3,730	0.779	41,750
		4,000	1 1/8" STD	1,000	2,480	0.514	21,620	2,480	0.514	21,620
				3,500	2,480	0.514	21,615	2,480	0.514	21,615
				6,500	2,480	0.514	21,620	2,480	0.514	21,620
			1 1/8" HS	1,000	3,030	0.633	27,410	3,730	0.779	35,785
				3,500	3,030	0.633	27,410	3,730	0.779	35,785
				6,500	3,030	0.633	27,410	3,730	0.779	35,785
HFX-24x12	140 1/4	2,500	1 1/8" STD	1,000	2,515	0.246	19,490	2,735	0.268	21,620
				3,500	2,515	0.246	19,490	2,735	0.268	21,620
				6,500	2,515	0.246	19,490	2,735	0.268	21,620
			1 1/8" HS	1,000	3,410	0.334	28,975	4,470	0.439	45,935
				3,500	3,410	0.334	28,975	4,395	0.431	44,165
				6,500	3,410	0.334	28,975	4,280	0.420	41,850
		3,000	1 1/8" STD	1,000	2,515	0.246	18,825	2,830	0.277	21,620
				3,500	2,515	0.246	18,825	2,825	0.277	21,605
				6,500	2,515	0.246	18,825	2,815	0.276	21,490
			1 1/8" HS	1,000	3,410	0.334	27,235	4,720	0.463	43,195
				3,500	3,410	0.334	27,235	4,720	0.463	43,195
				6,500	3,410	0.334	27,235	4,720	0.463	43,195
		4,000	1 1/8" STD	1,000	2,515	0.246	18,115	2,935	0.288	21,550
				3,500	2,515	0.246	18,115	2,925	0.287	21,460
				6,500	2,515	0.246	18,115	2,915	0.286	21,365
			1 1/8" HS	1,000	3,410	0.334	25,595	4,720	0.463	38,105
				3,500	3,410	0.334	25,595	4,720	0.463	38,105
				6,500	3,410	0.334	25,595	4,720	0.463	38,105

ICC-ES® Most Widely Accepted and Trusted

TABLE 1.1A—*Hardy Frame*® INSTALLATION - ON CONCRETE[1,2] (CONTINUED)

Model Number	Net Height H (in)	Concrete Compressive Strength f'c (psi)	HD Bolt Dia (in) and Grade [6]	Applied Axial Load [3]	Seismic			Wind		
					Allowable In-Plane Shear V [5,7] (lbs)	Drift at V [5] (in.)	Uplift at V [4, 5] (lbs)	Allowable In-Plane Shear V [5,7] (lbs)	Drift at V [5] (in.)	Uplift at V [4, 5] (lbs)
HFX-32x12	140 1/4	2,500	7/8" STD	1,000	1,775	0.347	10,160	1,855	0.364	10,630
				3,500	1,420	0.278	8,130	1,420	0.278	8,130
				6,500	895	0.175	5,130	895	0.175	5,130
			7/8" HS	1,000	1,975	0.386	11,295	1,975	0.386	11,295
				3,500	1,535	0.300	8,795	1,535	0.300	8,795
				6,500	1,010	0.198	5,795	1,010	0.198	5,795
		3,000	7/8" STD	1,000	1,775	0.347	10,160	2,070	0.405	11,835
				3,500	1,630	0.319	9,335	1,630	0.319	9,335
				6,500	1,105	0.216	6,335	1,105	0.217	6,335
			7/8" HS	1,000	2,405	0.470	13,755	2,405	0.470	13,755
				3,500	1,965	0.384	11,255	1,965	0.385	11,255
				6,500	1,440	0.282	8,255	1,440	0.282	8,255
		4,000	7/8" STD	1,000	1,775	0.347	10,160	2,155	0.422	12,335
				3,500	1,775	0.347	10,160	1,895	0.371	10,845
				6,500	1,370	0.268	7,845	1,370	0.268	7,845
			7/8" HS	1,000	2,660	0.520	15,225	2,945	0.576	16,860
				3,500	2,660	0.520	15,225	2,765	0.541	15,830
				6,500	2,240	0.438	12,830	2,240	0.438	12,830
HFX-44x12	140 1/4	2,500	7/8" STD	1,000	2,280	0.231	8,945	2,770	0.281	10,865
				3,500	2,135	0.216	8,365	2,135	0.216	8,365
				6,500	1,370	0.139	5,365	1,370	0.139	5,365
			7/8" HS	1,000	2,970	0.301	11,645	2,970	0.302	11,645
				3,500	2,330	0.237	9,145	2,330	0.237	9,145
				6,500	1,565	0.159	6,145	1,565	0.159	6,145
		3,000	7/8" STD	1,000	2,280	0.231	8,945	2,820	0.286	11,060
				3,500	2,280	0.231	8,945	2,390	0.242	9,385
				6,500	1,625	0.165	6,385	1,625	0.165	6,385
			7/8" HS	1,000	3,615	0.367	14,175	3,615	0.367	14,175
				3,500	2,975	0.302	11,675	2,975	0.302	11,675
				6,500	2,210	0.225	8,675	2,210	0.225	8,675
		4,000	7/8" STD	1,000	2,280	0.231	8,945	2,820	0.286	11,060
				3,500	2,280	0.231	8,945	2,715	0.275	10,655
				6,500	1,950	0.198	7,655	1,950	0.198	7,655
			7/8" HS	1,000	3,800	0.386	14,910	3,955	0.402	15,515
				3,500	3,800	0.386	14,910	3,955	0.402	15,515
				6,500	3,450	0.350	13,530	3,450	0.351	13,530
HFX-15x13	152 1/4	2,500	1 1/8" STD	1,000	1,240	0.576	21,615	1,240	0.575	21,615
				3,500	1,235	0.573	21,380	1,235	0.572	21,380
				6,500	1,205	0.559	20,560	1,205	0.558	20,560
			1 1/8" HS	1,000	1,435	0.666	29,315	1,465	0.680	31,340
				3,500	1,370	0.637	26,150	1,370	0.637	26,150
				6,500	1,240	0.577	21,625	1,240	0.577	21,625
		3,000	1 1/8" STD	1,000	1,325	0.616	21,620	1,325	0.615	21,620
				3,500	1,325	0.616	21,620	1,325	0.615	21,620
				6,500	1,325	0.616	21,615	1,325	0.615	21,615
			1 1/8" HS	1,000	1,435	0.666	24,360	1,765	0.819	38,195
				3,500	1,435	0.666	24,360	1,670	0.777	32,600
				6,500	1,435	0.666	24,360	1,550	0.719	27,795
		4,000	1 1/8" STD	1,000	1,435	0.666	21,605	1,435	0.665	21,620
				3,500	1,435	0.666	21,605	1,435	0.665	21,620
				6,500	1,435	0.666	21,605	1,435	0.665	21,620
			1 1/8" HS	1,000	1,435	0.666	21,605	1,820	0.846	30,090
				3,500	1,435	0.666	21,605	1,820	0.846	30,090
				6,500	1,435	0.666	21,605	1,820	0.846	30,090
HFX-18x13	152 1/4	2,500	1 1/8" STD	1,000	1,665	0.358	21,615	1,665	0.359	21,615
				3,500	1,665	0.358	21,620	1,665	0.359	21,620
				6,500	1,665	0.358	21,620	1,665	0.359	21,620
			1 1/8" HS	1,000	2,250	0.487	38,395	2,265	0.490	39,500
				3,500	2,150	0.465	33,700	2,150	0.465	33,700
				6,500	1,990	0.431	28,745	1,990	0.431	28,745
		3,000	1 1/8" STD	1,000	1,755	0.377	21,615	1,755	0.377	21,615
				3,500	1,755	0.377	21,620	1,755	0.377	21,615
				6,500	1,755	0.377	21,620	1,755	0.377	21,615
			1 1/8" HS	1,000	2,250	0.487	31,080	2,380	0.515	34,260
				3,500	2,250	0.487	31,080	2,380	0.515	34,260
				6,500	2,250	0.487	31,080	2,380	0.515	34,260
		4,000	1 1/8" STD	1,000	1,805	0.388	20,840	1,860	0.400	21,615
				3,500	1,805	0.388	20,840	1,860	0.400	21,620
				6,500	1,805	0.388	20,840	1,860	0.400	21,615
			1 1/8" HS	1,000	2,250	0.487	27,415	2,380	0.515	29,520
				3,500	2,250	0.487	27,415	2,380	0.515	29,520
				6,500	2,250	0.487	27,415	2,380	0.515	29,520

ICC-ES® Most Widely Accepted and Trusted

TABLE 1.1A—*Hardy Frame*® INSTALLATION - ON CONCRETE[1,2] (CONTINUED)

Model Number	Net Height H (in)	Concrete Compressive Strength f'c (psi)	HD Bolt Dia (in) and Grade [6]	Applied Axial Load [3]	Seismic			Wind		
					Allowable In-Plane Shear V [5,7] (lbs)	Drift at V [5] (in.)	Uplift at V [4, 5] (lbs)	Allowable In-Plane Shear V [5,7] (lbs)	Drift at V [5] (in.)	Uplift at V [4, 5] (lbs)
HFX-21x13	152 1/4	2,500	1 1/8" STD	1,000	2,095	0.518	21,620	2,095	0.518	21,620
				3,500	2,095	0.518	21,615	2,095	0.518	21,615
				6,500	2,095	0.518	21,615	2,095	0.518	21,615
			1 1/8" HS	1,000	2,850	0.666	34,445	3,190	0.747	44,825
				3,500	2,850	0.666	34,445	3,095	0.724	41,070
				6,500	2,850	0.666	34,445	2,915	0.682	36,045
		3,000	1 1/8" STD	1,000	2,180	0.539	21,620	2,180	0.539	21,620
				3,500	2,180	0.539	21,620	2,180	0.539	21,620
				6,500	2,180	0.539	21,620	2,180	0.539	21,620
			1 1/8" HS	1,000	2,850	0.666	30,845	3,610	0.844	46,095
				3,500	2,850	0.666	30,845	3,555	0.832	44,690
				6,500	2,850	0.666	30,845	3,480	0.814	42,755
		4,000	1 1/8" STD	1,000	2,285	0.566	21,620	2,285	0.566	21,620
				3,500	2,285	0.566	21,620	2,285	0.566	21,620
				6,500	2,285	0.566	21,620	2,285	0.566	21,620
			1 1/8" HS	1,000	2,850	0.666	28,110	3,615	0.846	38,380
				3,500	2,850	0.666	28,110	3,615	0.846	38,380
				6,500	2,850	0.666	28,110	3,615	0.846	38,380
HFX-24x13	152 1/4	2,500	1 1/8" STD	1,000	2,360	0.271	19,935	2,520	0.289	21,615
				3,500	2,360	0.271	19,935	2,520	0.289	21,620
				6,500	2,360	0.271	19,935	2,520	0.289	21,620
			1 1/8" HS	1,000	3,140	0.360	28,960	4,120	0.473	45,935
				3,500	3,140	0.360	28,960	4,045	0.464	44,165
				6,500	3,140	0.360	28,960	3,940	0.452	41,850
		3,000	1 1/8" STD	1,000	2,360	0.271	19,235	2,605	0.299	21,620
				3,500	2,360	0.271	19,235	2,605	0.299	21,620
				6,500	2,360	0.271	19,235	2,605	0.299	21,615
			1 1/8" HS	1,000	3,140	0.360	27,220	4,350	0.499	43,230
				3,500	3,140	0.360	27,220	4,350	0.499	43,230
				6,500	3,140	0.360	27,220	4,350	0.499	43,230
		4,000	1 1/8" STD	1,000	2,360	0.271	18,490	2,715	0.311	21,620
				3,500	2,360	0.271	18,490	2,715	0.311	21,615
				6,500	2,360	0.271	18,490	2,715	0.311	21,620
			1 1/8" HS	1,000	3,140	0.360	25,580	4,350	0.499	38,130
				3,500	3,140	0.360	25,580	4,350	0.499	38,130
				6,500	3,140	0.360	25,580	4,350	0.499	38,130
HFX-32x13	152 1/4	2,500	7/8" STD	1,000	1,670	0.415	10,380	1,710	0.425	10,630
				3,500	1,310	0.325	8,130	1,310	0.325	8,130
				6,500	825	0.205	5,130	825	0.205	5,130
			7/8" HS	1,000	1,820	0.452	11,295	1,820	0.452	11,295
				3,500	1,415	0.352	8,795	1,415	0.352	8,795
				6,500	935	0.232	5,795	935	0.232	5,795
		3,000	7/8" STD	1,000	1,670	0.415	10,380	1,905	0.473	11,835
				3,500	1,505	0.373	9,335	1,505	0.373	9,335
				6,500	1,020	0.253	6,335	1,020	0.253	6,335
			7/8" HS	1,000	2,215	0.550	13,755	2,215	0.550	13,755
				3,500	1,810	0.450	11,255	1,810	0.450	11,255
				6,500	1,330	0.330	8,255	1,330	0.330	8,255
		4,000	7/8" STD	1,000	1,670	0.415	10,380	2,025	0.503	12,585
				3,500	1,670	0.415	10,380	1,745	0.434	10,845
				6,500	1,265	0.314	7,845	1,265	0.314	7,845
			7/8" HS	1,000	2,305	0.573	14,325	2,305	0.573	14,325
				3,500	2,305	0.573	14,325	2,305	0.573	14,325
				6,500	2,065	0.513	12,830	2,065	0.513	12,830
HFX-44x13	152 1/4	2,500	7/8" STD	1,000	2,160	0.277	9,200	2,550	0.327	10,865
				3,500	1,965	0.252	8,365	1,965	0.252	8,365
				6,500	1,260	0.162	5,365	1,260	0.162	5,365
			7/8" HS	1,000	2,735	0.351	11,645	2,735	0.351	11,645
				3,500	2,145	0.275	9,145	2,145	0.275	9,145
				6,500	1,445	0.185	6,145	1,445	0.185	6,145
		3,000	7/8" STD	1,000	2,160	0.277	9,200	2,665	0.342	11,355
				3,500	2,160	0.277	9,200	2,205	0.283	9,385
				6,500	1,500	0.192	6,385	1,500	0.192	6,385
			7/8" HS	1,000	3,110	0.399	13,245	3,110	0.399	13,245
				3,500	2,740	0.352	11,675	2,740	0.352	11,675
				6,500	2,035	0.261	8,675	2,035	0.261	8,675
		4,000	7/8" STD	1,000	2,160	0.277	9,200	2,665	0.342	11,355
				3,500	2,160	0.277	9,200	2,500	0.321	10,655
				6,500	1,795	0.230	7,655	1,795	0.231	7,655
			7/8" HS	1,000	3,110	0.399	13,245	3,110	0.399	13,245
				3,500	3,110	0.399	13,245	3,110	0.399	13,245
				6,500	3,110	0.399	13,245	3,110	0.399	13,245

TABLE 1.1A—*Hardy Frame*® BALLOON WALL INSTALLATION - ON CONCRETE[1,2]

Model Number	Net Height H (in)	Concrete Compressive Strength f'c (psi)	HD Bolt Dia (in) and Grade [6]	Applied Axial Load [3]	Seismic			Wind		
					Allowable In-Plane Shear V [5,7] (lbs)	Drift at V [5] (in.)	Uplift at V [4, 5] (lbs)	Allowable In-Plane Shear V [5,7] (lbs)	Drift at V [5] (in.)	Uplift at V [4, 5] (lbs)
HFX-15x14	164 1/4	2,500	1 1/8" HS	4,000	1,120	0.611	20,680	1,250	0.767	25,325
		3,000			1,120	0.611	18,925	1,490	0.913	29,870
		4,000			1,120	0.611	17,460	1,490	0.913	25,135
HFX-18x14		2,500			1,380	0.642	18,475	1,960	0.912	32,455
		3,000			1,380	0.642	17,545	1,960	0.912	28,170
		4,000			1,380	0.642	16,630	1,960	0.912	25,320
HFX-21x14		2,500			2,115	0.512	24,300	2,850	0.862	40,385
		3,000			2,115	0.512	22,895	3,015	0.913	37,905
		4,000			2,115	0.512	21,555	3,015	0.913	33,290
HFX-24x14		2,500			2,090	0.527	18,855	3,190	0.805	33,155
		3,000			2,090	0.527	18,240	3,190	0.805	30,680
		4,000			2,090	0.527	17,580	3,190	0.805	28,505
HFX-15x15	176 1/4	2,500	1 1/8" HS	3,500	1,045	0.655	20,745	1,185	0.833	26,150
		3,000			1,045	0.655	18,975	1,390	0.979	29,995
		4,000			1,045	0.655	17,500	1,390	0.979	25,205
HFX-18x15		2,500			1,310	0.701	18,935	1,830	0.979	32,595
		3,000			1,310	0.701	17,955	1,830	0.979	28,250
		4,000			1,310	0.701	16,990	1,830	0.979	25,380
HFX-21x15		2,500			1,975	0.591	24,370	2,620	0.979	39,120
		3,000			1,975	0.591	22,955	2,620	0.979	33,860
		4,000			1,975	0.591	21,605	2,620	0.979	30,405
HFX-24x15		2,500			1,960	0.597	19,000	2,830	0.859	30,790
		3,000			1,960	0.597	18,375	2,830	0.859	28,750
		4,000			1,960	0.597	17,700	2,830	0.859	26,890
HFX-15x16	188 1/4	2,500	1 1/8" HS	3,000	980	0.700	20,805	1,125	0.901	27,015
		3,000			980	0.700	19,025	1,305	1.046	30,105
		4,000			980	0.700	17,540	1,305	1.046	25,265
HFX-18x16		2,500			1,250	0.760	19,435	1,715	1.046	32,655
		3,000			1,250	0.760	18,385	1,715	1.046	28,285
		4,000			1,250	0.760	17,365	1,715	1.046	25,410
HFX-21x16		2,500			1,850	0.675	24,430	2,295	1.046	34,255
		3,000			1,850	0.675	23,005	2,295	1.046	30,715
		4,000			1,850	0.675	21,650	2,295	1.046	28,005
HFX-24x16		2,500			1,825	0.625	18,875	2,670	0.913	31,140
		3,000			1,825	0.625	18,255	2,670	0.913	29,040
		4,000			1,825	0.625	17,595	2,670	0.913	27,130
HFX-15x17	200 1/4	2,500	1 1/8" HS	2,500	925	0.745	20,860	1,070	0.970	27,940
		3,000			925	0.745	19,065	1,230	1.113	30,200
		4,000			925	0.745	17,570	1,230	1.113	25,320
HFX-18x17		2,500			1,195	0.824	19,890	1,615	1.113	32,780
		3,000			1,195	0.824	18,775	1,615	1.113	28,360
		4,000			1,195	0.824	17,705	1,615	1.113	25,465
HFX-21x17		2,500			1,745	0.765	24,485	2,260	1.112	37,390
		3,000			1,745	0.765	23,050	2,260	1.112	32,810
		4,000			1,745	0.765	21,690	2,260	1.112	29,620
HFX-24x17		2,500			1,695	0.660	18,600	2,485	0.967	30,685
		3,000			1,695	0.660	18,005	2,485	0.967	28,665
		4,000			1,695	0.660	17,360	2,485	0.967	26,815
HFX-15x18	212 1/4	2,500	1 1/8" HS	2,000	875	0.789	20,905	1,025	1.041	28,940
		3,000			875	0.789	19,100	1,160	1.179	30,285
		4,000			875	0.789	17,600	1,160	1.179	25,365
HFX-18x18		2,500			1,150	0.887	20,445	1,530	1.179	33,090
		3,000			1,150	0.887	19,250	1,530	1.179	28,545
		4,000			1,150	0.887	18,120	1,530	1.179	25,600
HFX-21x18		2,500			1,645	0.860	24,530	2,010	1.179	33,445
		3,000			1,645	0.860	23,090	2,010	1.179	30,135
		4,000			1,645	0.860	21,725	2,010	1.179	27,555
HFX-24x18		2,500			1,595	0.697	18,540	2,335	1.020	30,505
		3,000			1,595	0.697	17,950	2,335	1.020	28,515
		4,000			1,595	0.697	17,310	2,335	1.020	26,685
HFX-15x19	224 1/4	2,500	1 1/8" HS	2,000	825	0.834	20,950	970	1.098	28,940
		3,000			825	0.834	19,130	1,100	1.246	30,360
		4,000			825	0.834	17,625	1,100	1.246	25,410
HFX-18x19		2,500			1,105	0.953	20,885	1,450	1.246	33,190
		3,000			1,105	0.953	19,625	1,450	1.246	28,600
		4,000			1,105	0.953	18,440	1,450	1.246	25,640
HFX-21x19		2,500			1,560	0.961	24,575	1,800	1.246	30,460
		3,000			1,560	0.961	23,130	1,800	1.246	27,910
		4,000			1,560	0.961	21,755	1,800	1.246	25,770
HFX-24x19		2,500			1,515	0.734	18,620	2,220	1.072	30,700
		3,000			1,515	0.734	18,020	2,220	1.072	28,680
		4,000			1,515	0.734	17,380	2,220	1.072	26,825

TABLE 1.1A—*Hardy Frame*® BALLOON WALL INSTALLATION - ON CONCRETE[1,2] (CONTINUED)

Model Number	Net Height H (in)	Concrete Compressive Strength f'c (psi)	HD Bolt Dia (in) and Grade [6]	Applied Axial Load [3]	Seismic: Allowable In-Plane Shear V [5,7] (lbs)	Seismic: Drift at V [5] (in.)	Seismic: Uplift at V [4, 5] (lbs)	Wind: Allowable In-Plane Shear V [5,7] (lbs)	Wind: Drift at V [5] (in.)	Wind: Uplift at V [4, 5] (lbs)
HFX-15x20	236 1/4	2,500	1 1/8" HS	2,000	785	0.879	20,985	920	1.156	28,940
		3,000			785	0.879	19,160	1,045	1.312	30,430
		4,000			785	0.879	17,650	1,045	1.312	25,445
HFX-18x20		2,500			1,070	1.020	21,490	1,220	1.166	26,315
		3,000			1,070	1.020	20,135	1,220	1.166	23,990
		4,000			1,070	1.020	18,875	1,220	1.166	22,075
HFX-21x20		2,500			1,263	1.068	24,610	1,620	1.313	28,060
		3,000			1,263	1.068	23,160	1,620	1.313	26,020
		4,000			1,263	1.068	21,785	1,620	1.313	24,210
HFX-24x20		2,500			1,460	0.770	18,965	2,130	1.124	31,190
		3,000			1,460	0.770	18,340	2,130	1.124	29,085
		4,000			1,460	0.770	17,670	2,130	1.124	27,170

For **SI**: 1 inch = 25.4 mm, 1 foot = 304.8 mm, 1 lb = 4.45 N, 1 psi 6.89 kPa.

Notes

1) The values in this table are based on Allowable Stress Design (ASD) and pertain to installation on 2500, 3000, and 4000 psi normal weight concrete or nut & washer with 5,000 psi minimum non-shrink grout in accordance with Section 3.8.6 of this evaluation report. In accordance with Section 4.1.1, the tabulated values in this table are applicable only to those details in Figures 2 and 3, which match the support conditions described in Section 4.1.1 and in the footnotes of this table, including details 1, 2, 3, 4, 5, 6, 7, 9, 10, 11, 19, 26, 27, 29, 34, 35, 36 and 37. For details 2, 3, 10, 34 and 36, the tabulated allowable in-plane shear values and drift values are for in-plane lateral shear forces applied to the top of the panels/brace frames, and the strength and drift of the complete lateral-force-resisting system must be determined by the building design professional in accordance with Section 4.1.1 by considering the effects of the additional members/connections at top of the panels/brace frames.

2) Figure 4 provides anchorage details that satisfy the combined shear and uplift values tabulated in Table 1.1A. See Section 4.1.5 of this evaluation report for additional information.

3) The applicable applied vertical compressive axial loads are concurrent with the allowable in-plane lateral shear load. For Panels the axial load must be applied within the middle 1/3 of the Panel width or be uniformly distributed across the entire Panel width. For Brace Frame the axial load is acting and along the centerline of the post.

4) Tabulated anchor tension (uplift) loads assume no resisting axial load. For Panels subjected to allowable in-plane lateral shear and concurrently applied axial compression loads, anchor tension loads at allowable shear values and including the effect of axial load, must be calculated in accordance with the applicable equation in Figure 5 of this evaluation report. For Brace Frames the anchor tension load equals to tabulated uplift minus P, where P is the applicable applied axial load in the Post.

5) Allowable lateral shear, drift and uplift values may be linearly interpolated for intermediate height or axial loads In accordance with Section 4.1.1 of this report. Drift may be linearly reduced when an applied shear load is less than the allowable shear.

6) STD indicates bolts complying with ASTM F1554 Grade 36. HS indicates bolts complying with a high strength steel specification as set forth in Section 3.8.4 of this Report.

7) When HFX Panel is installed with a fixed connection at a steel beam or other steel member (either at base or top of panel, or at both top and bottom), the allowable shear value at each connection must be determined using the value in the Table for 4000 psi concrete strength.

TABLE 1.2A—*Hardy Frame*® INSTALLATION - ON RAISED FLOORS[1,2]

Model Number	Net Height H (in)	HD Bolt Dia (in) and Grade [6]	Applied Axial Load [3]	Seismic: Allowable In-Plane Shear V [5] (lbs)	Seismic: Drift at V [5] (in.)	Seismic: Uplift at V [4, 5] (lbs)	Wind: Allowable In-Plane Shear V [5] (lbs)	Wind: Drift at V [5] (in.)	Wind: Uplift at V [4, 5] (lbs)
HFX-12x78	78	1 1/8" STD	1,000	1,380	0.341	12,165	1,755	0.433	15,585
			3,500	1,350	0.341	10,625	1,685	0.433	13,720
			6,500	1,310	0.341	8,775	1,400	0.363	9,610
HFX-15x78	78	1 1/8" STD	1,000	1,780	0.341	12,545	2,245	0.433	15,945
			3,500	1,750	0.341	10,965	2,175	0.433	14,065
			6,500	1,715	0.341	9,070	1,790	0.354	9,610
HFX-18x78	78	1 1/8" STD	1,000	2,875	0.341	15,935	3,430	0.433	19,100
			3,500	2,780	0.341	14,055	3,050	0.386	15,610
			6,500	2,285	0.279	9,610	2,285	0.278	9,610
HFX-21x78	78	1 1/8" STD	1,000	3,635	0.341	16,520	4,355	0.433	19,915
			3,500	3,525	0.341	14,690	3,720	0.366	15,610
			6,500	2,775	0.265	9,610	2,775	0.265	9,610
HFX-24x78	78	1 1/8" STD	1,000	3,830	0.236	14,700	5,105	0.343	19,770
			3,500	3,830	0.243	13,395	4,385	0.292	15,610
			6,500	3,270	0.210	9,610	3,270	0.210	9,610
		1 1/8" HS	1,000	5,070	0.341	19,620	5,315	0.363	20,610
			3,500	4,385	0.293	15,610	4,385	0.293	15,610
			6,500	3,270	0.211	9,610	3,270	0.211	9,610
HFX-12x8	92 1/4	1 1/8" STD	1,000	1,180	0.404	12,305	1,490	0.512	15,690
			3,500	1,155	0.404	10,760	1,435	0.512	13,820
			6,500	1,120	0.404	8,910	1,185	0.426	9,610
HFX-15x8	92 1/4	1 1/8" STD	1,000	1,475	0.404	12,260	1,870	0.512	15,690
			3,500	1,450	0.404	10,685	1,810	0.512	13,815
			6,500	1,420	0.404	8,795	1,510	0.428	9,610
HFX-18x8	92 1/4	1 1/8" STD	1,000	2,450	0.404	16,055	2,920	0.512	19,230
			3,500	2,370	0.404	14,170	2,580	0.453	15,610
			6,500	1,930	0.326	9,610	1,930	0.326	9,610
HFX-21x8	92 1/4	1 1/8" STD	1,000	3,025	0.404	16,245	3,625	0.512	19,585
			3,500	2,930	0.404	14,425	3,145	0.442	15,610
			6,500	2,350	0.320	9,610	2,350	0.320	9,610
HFX-24x8	92 1/4	1 1/8" STD	1,000	3,420	0.292	15,555	4,495	0.425	20,610
			3,500	3,420	0.307	14,250	3,710	0.343	15,610
			6,500	2,765	0.246	9,610	2,765	0.247	9,610
		1 1/8" HS	1,000	4,315	0.404	19,770	4,495	0.426	20,610
			3,500	3,710	0.344	15,610	3,710	0.344	15,610
			6,500	2,765	0.247	9,610	2,765	0.248	9,610
HFX-32x8	92 1/4	7/8" STD	1,000	2,135	0.310	8,040	2,135	0.310	8,040
			3,500	1,470	0.229	5,540	1,470	0.229	5,540
			6,500	675	0.139	2,540	675	0.139	2,540

ICC-ES® Most Widely Accepted and Trusted

TABLE 1.2A—*Hardy Frame*® INSTALLATION - ON RAISED FLOORS[1,2] (CONTINUED)

Model Number	Net Height H (in)	HD Bolt Dia (in) and Grade [6]	Applied Axial Load [3]	Seismic			Wind		
				Allowable In-Plane Shear V [5] (lbs)	Drift at V [5] (in.)	Uplift at V [4, 5] (lbs)	Allowable In-Plane Shear V [5] (lbs)	Drift at V [5] (in.)	Uplift at V [4, 5] (lbs)
HFX-44x8	92 1/4	7/8" STD	1,000	2,950	0.269	7,610	3,215	0.264	8,295
			3,500	2,245	0.188	5,795	2,245	0.188	5,795
			6,500	1,085	0.118	2,795	1,085	0.118	2,795
		7/8" HS	1,000	3,215	0.263	8,295	3,215	0.263	8,295
			3,500	2,245	0.188	5,795	2,245	0.188	5,795
			6,500	1,085	0.118	2,795	1,085	0.118	2,795
HFX-12x9	104 1/4	1 1/8" STD	1,000	1,050	0.456	12,395	1,325	0.579	15,770
			3,500	1,030	0.456	10,850	1,275	0.579	13,900
			6,500	1,000	0.456	8,995	1,050	0.478	9,610
HFX-15x9	104 1/4	1 1/8" STD	1,000	1,285	0.456	12,050	1,635	0.579	15,500
			3,500	1,260	0.456	10,480	1,585	0.579	13,635
			6,500	1,235	0.456	8,595	1,340	0.491	9,610
HFX-18x9	104 1/4	1 1/8" STD	1,000	2,175	0.456	16,100	2,590	0.579	19,285
			3,500	2,100	0.456	14,215	2,285	0.510	15,610
			6,500	1,710	0.367	9,610	1,710	0.367	9,610
HFX-21x9	104 1/4	1 1/8" STD	1,000	2,640	0.456	16,040	3,170	0.579	19,340
			3,500	2,565	0.456	14,230	2,785	0.508	15,610
			6,500	2,080	0.367	9,610	2,080	0.367	9,610
HFX-24x9	104 1/4	1 1/8" STD	1,000	3,140	0.346	16,160	3,980	0.477	20,610
			3,500	3,140	0.362	14,850	3,285	0.385	15,610
			6,500	2,450	0.277	9,610	2,450	0.277	9,610
		1 1/8" HS	1,000	3,835	0.456	19,855	3,980	0.478	20,610
			3,500	3,285	0.386	15,610	3,285	0.386	15,610
			6,500	2,450	0.278	9,610	2,450	0.278	9,610
HFX-32x9	104 1/4	7/8" STD	1,000	1,890	0.365	8,040	1,890	0.365	8,040
			3,500	1,300	0.269	5,540	1,300	0.269	5,540
			6,500	595	0.162	2,540	595	0.162	2,540
HFX-44x9	104 1/4	7/8" STD	1,000	2,745	0.312	8,005	2,845	0.308	8,295
			3,500	1,990	0.219	5,795	1,990	0.220	5,795
			6,500	960	0.136	2,795	960	0.136	2,795
		7/8" HS	1,000	2,845	0.308	8,295	2,845	0.308	8,295
			3,500	1,990	0.220	5,795	1,990	0.220	5,795
			6,500	960	0.136	2,795	960	0.136	2,795
HFX-12x10	116 1/4	1 1/8" STD	1,000	950	0.509	12,475	1,195	0.646	15,835
			3,500	925	0.509	10,925	1,150	0.646	13,965
			6,500	900	0.509	9,070	940	0.530	9,610
HFX-15x10	116 1/4	1 1/8" STD	1,000	1,135	0.509	11,865	1,445	0.646	15,280
			3,500	1,115	0.509	10,295	1,405	0.646	13,470
			6,500	1,090	0.509	8,415	1,200	0.556	9,610
HFX-18x10	116 1/4	1 1/8" STD	1,000	1,960	0.509	16,190	2,335	0.646	19,380
			3,500	1,895	0.509	14,300	2,050	0.565	15,610
			6,500	1,530	0.407	9,610	1,530	0.407	9,610
HFX-21x10	116 1/4	1 1/8" STD	1,000	2,345	0.509	15,860	2,810	0.646	19,125
			3,500	2,275	0.509	14,050	2,495	0.574	15,610
			6,500	1,865	0.416	9,610	1,865	0.416	9,610
HFX-24x10	116 1/4	1 1/8" STD	1,000	2,900	0.400	16,655	3,565	0.529	20,610
			3,500	2,900	0.418	15,350	2,945	0.427	15,610
			6,500	2,195	0.307	9,610	2,195	0.307	9,610
		1 1/8" HS	1,000	3,450	0.509	19,910	3,565	0.531	20,610
			3,500	2,945	0.429	15,610	2,945	0.429	15,610
			6,500	2,195	0.309	9,610	2,195	0.308	9,610
HFX-32x10	116 1/4	7/8" STD	1,000	1,695	0.425	8,040	1,695	0.425	8,040
			3,500	1,170	0.312	5,540	1,170	0.312	5,540
			6,500	535	0.186	2,540	535	0.186	2,540
HFX-44x10	116 1/4	7/8" STD	1,000	2,550	0.356	8,295	2,550	0.356	8,295
			3,500	1,785	0.254	5,795	1,785	0.254	5,795
			6,500	860	0.156	2,795	860	0.156	2,795
HFX-15x11	128 1/4	1 1/8" STD	1,000	1,015	0.561	11,720	1,295	0.712	15,065
			3,500	1,000	0.561	10,155	1,260	0.712	13,320
			6,500	975	0.561	8,275	1,090	0.621	9,610
HFX-18x11	128 1/4	1 1/8" STD	1,000	1,780	0.561	16,240	2,115	0.712	19,375
			3,500	1,720	0.561	14,345	1,855	0.623	15,610
			6,500	1,390	0.447	9,610	1,390	0.449	9,610
HFX-21x11	128 1/4	1 1/8" STD	1,000	2,105	0.561	15,695	2,520	0.712	18,925
			3,500	2,040	0.561	13,890	2,260	0.642	15,610
			6,500	1,690	0.465	9,610	1,690	0.465	9,610
HFX-24x11	128 1/4	1 1/8" STD	1,000	2,695	0.455	17,090	3,235	0.580	20,610
			3,500	2,670	0.469	15,610	2,670	0.468	15,610
			6,500	1,990	0.337	9,610	1,990	0.337	9,610
		1 1/8" HS	1,000	3,150	0.561	20,070	3,235	0.581	20,610
			3,500	2,670	0.468	15,610	2,670	0.469	15,610
			6,500	1,990	0.337	9,610	1,990	0.337	9,610
HFX-32x11	128 1/4	7/8" STD	1,000	1,535	0.488	8,040	1,535	0.488	8,040
			3,500	1,060	0.358	5,540	1,060	0.358	5,540
			6,500	485	0.211	2,540	485	0.212	2,540
HFX-44x11	128 1/4	7/8" STD	1,000	2,315	0.407	8,295	2,315	0.406	8,295
			3,500	1,615	0.290	5,795	1,615	0.289	5,795
			6,500	780	0.177	2,795	780	0.177	2,795
HFX-15x12	140 1/4	1 1/8" STD	1,000	915	0.614	11,565	1,170	0.779	14,870
			3,500	900	0.614	10,005	1,140	0.779	13,185
			6,500	880	0.614	8,130	995	0.687	9,610
HFX-18x12	140 1/4	1 1/8" STD	1,000	1,635	0.614	16,295	1,945	0.779	19,505
			3,500	1,580	0.614	14,400	1,695	0.676	15,610
			6,500	1,270	0.487	9,610	1,270	0.487	9,610

TABLE 1.2A—*Hardy Frame*® INSTALLATION - ON RAISED FLOORS[1,2] (CONTINUED)

Model Number	Net Height H (in)	HD Bolt Dia (in) and Grade [6]	Applied Axial Load [3]	Seismic: Allowable In-Plane Shear V [5] (lbs)	Seismic: Drift at V [5] (in.)	Seismic: Uplift at V [4, 5] (lbs)	Wind: Allowable In-Plane Shear V [5] (lbs)	Wind: Drift at V [5] (in.)	Wind: Uplift at V [4, 5] (lbs)
HFX-21x12	140 1/4	1 1/8" STD	1,000	1,830	0.614	14,900	2,215	0.779	18,155
			3,500	1,790	0.614	13,270	2,070	0.738	15,610
			6,500	1,545	0.536	9,610	1,545	0.536	9,610
HFX-24x12	140 1/4	1 1/8" STD	1,000	2,515	0.509	17,450	2,955	0.633	20,610
			3,500	2,440	0.510	15,610	2,440	0.511	15,610
			6,500	1,820	0.367	9,610	1,820	0.367	9,610
		1 1/8" HS	1,000	2,890	0.614	20,130	2,955	0.633	20,610
			3,500	2,440	0.510	15,610	2,440	0.511	15,610
			6,500	1,820	0.367	9,610	1,820	0.367	9,610
HFX-32x12	140 1/4	7/8" STD	1,000	1,405	0.556	8,040	1,405	0.556	8,040
			3,500	970	0.406	5,540	970	0.407	5,540
			6,500	445	0.238	2,540	445	0.238	2,540
HFX-44x12	140 1/4	7/8" STD	1,000	2,115	0.459	8,295	2,115	0.459	8,295
			3,500	1,480	0.327	5,795	1,480	0.327	5,795
			6,500	715	0.199	2,795	715	0.199	2,795
HFX-15x13	152 1/4	1 1/8" STD	1,000	835	0.666	11,425	1,065	0.846	14,695
			3,500	820	0.666	9,865	1,045	0.846	13,060
			6,500	805	0.666	7,995	915	0.754	9,610
HFX-18x13	152 1/4	1 1/8" STD	1,000	1,510	0.666	16,360	1,800	0.846	19,580
			3,500	1,460	0.666	14,465	1,565	0.730	15,610
			6,500	1,170	0.525	9,610	1,170	0.525	9,610
HFX-21x13	152 1/4	1 1/8" STD	1,000	1,670	0.666	14,765	2,025	0.846	18,030
			3,500	1,640	0.666	13,170	1,905	0.808	15,610
			6,500	1,425	0.586	9,610	1,425	0.586	9,610
		1 1/8" HS	1,000	1,730	0.666	15,305	2,080	0.846	18,510
			3,500	1,680	0.666	13,555	1,905	0.783	15,610
			6,500	1,425	0.567	9,610	1,425	0.567	9,610
HFX-24x13	152 1/4	1 1/8" STD	1,000	2,360	0.566	17,785	2,725	0.684	20,610
			3,500	2,250	0.553	15,610	2,250	0.552	15,610
			6,500	1,675	0.397	9,610	1,675	0.397	9,610
		1 1/8" HS	1,000	2,670	0.666	20,180	2,725	0.684	20,610
			3,500	2,250	0.552	15,610	2,250	0.552	15,610
			6,500	1,675	0.397	9,610	1,675	0.397	9,610
HFX-32x13	152 1/4	7/8" STD	1,000	1,295	0.626	8,040	1,295	0.626	8,040
			3,500	890	0.457	5,540	890	0.457	5,540
			6,500	410	0.266	2,540	410	0.266	2,540
HFX-44x13	152 1/4	7/8" STD	1,000	1,950	0.516	8,295	1,950	0.516	8,295
			3,500	1,360	0.367	5,795	1,360	0.367	5,795
			6,500	655	0.221	2,795	655	0.221	2,795

For **SI**: 1 inch = 25.4 mm, 1 lbf = 4.45 N

Notes

1) The values in this table are based on Allowable Stress Design (ASD) and pertain to installation on Raised Floor Systems supported on concrete or masonry foundations. In accordance with Section 4.1.1, the tabulated values in this table are applicable only to those details in Figures 2 and 3, which match the support conditions described in Section 4.1.1 and in the footnotes of this table, including details 2, 3, 6, 10, 22, 25, 33, 34, 35, 36 and 37. For details 2, 3, 10, 34 and 36, the tabulated allowable in-plane shear values and drift values are for in-plane lateral shear forces applied to the top of the panels/brace frames, and the strength and drift of the complete lateral-force-resisting system must be determined by the building design professional in accordance with Section 4.1.1 by considering the effects of the additional members/connections at top of the panels/brace frames.
2) Raised Floor System for Panels assumes a 2x wood sill plate, Engineered wood products (EWP) rim board (Fc = 680 psi) up to 12 inches deep with a Hardy Frame Bearing Plate installed below the panel. For EWP rim boards up to 18 inches deep the allowable shear value must be multiplied by 0.96 for 12 inch Panel widths and by 0.98 for 18 and 24 inch widths. For all Panel widths the corresponding drift does not change. Raised Floor System for Brace Frames assume a 2x wood sill plate, EWP rim board (F_c= 680 psi,12 inch deep), floor sheathing and a 2x wood bottom plate (F_c=625 psi) below. For wood structural panel (EWP) rim boards up to 18 inches deep the allowable shear value does not change and the corresponding drift must be multiplied by 1.03.
3) The applicable applied vertical compressive axial loads are concurrent with the allowable lateral shear load. For Panels the axial load must be applied within the middle 1/3 of the Panel width or be uniformly distributed across the entire Panel width. For Brace Frame the axial load is acting along the centerline of the post.
4) The Uplift values listed assume no resisting axial load. To determine the anchor tension load in Panels at design lateral shear values and including the effect of axial loads, the tension load equals uplift minus P/2, where P is the applicable applied axial load on the Panel. For Brace Frames the anchor tension load equals uplift minus P where P is the applicable applied axial load on the Post.
5) Allowable lateral shear , drift and uplift values may be linearly interpolated for intermediate height or axial loads In accordance with Section 4.1.1 of this report.
6) STD indicates bolts complying with ASTM F1554 Grade 36. HS indicates bolts complying with a high strength steel specification as set forth in Section 3.8.4 of this Report.

TABLE 1.3A—*Hardy Frame*® INSTALLATION - ON UPPER FLOORS[1,2]

Model Number	Net Height H (in)	HD Bolt Dia (in) and Grade [6]	Applied Axial Load [3]	Seismic: Allowable In-Plane Shear V [5] (lbs)	Seismic: Drift at V [5] (in.)	Seismic: Uplift at V [4, 5] (lbs)	Wind: Allowable In-Plane Shear V [5] (lbs)	Wind: Drift at V [5] (in.)	Wind: Uplift at V [4, 5] (lbs)
HFX-12x78	78	1 1/8" STD	1,000	1,245	0.341	10,930	1,590	0.433	14,075
			3,500	1,210	0.341	9,340	1,550	0.433	12,485
			6,500	1,165	0.341	7,425	1,400	0.405	9,610
HFX-15x78	78	1 1/8" STD	1,000	1,640	0.341	11,485	2,090	0.433	14,800
			3,500	1,600	0.341	9,860	2,040	0.433	13,085
			6,500	1,555	0.341	7,905	1,790	0.388	9,610
HFX-18x78	78	1 1/8" STD	1,000	2,665	0.341	14,715	3,225	0.433	17,920
			3,500	2,600	0.341	13,035	3,050	0.421	15,610
			6,500	2,285	0.307	9,610	2,285	0.306	9,610
HFX-21x78	78	1 1/8" STD	1,000	3,415	0.341	15,500	4,115	0.433	18,770
			3,500	3,305	0.341	13,660	3,720	0.396	15,610
			6,500	2,775	0.290	9,610	2,775	0.289	9,610

ICC-ES® Most Widely Accepted and Trusted

TABLE 1.3A—*Hardy Frame*® INSTALLATION - ON UPPER FLOORS[1,2] (CONTINUED)

Model Number	Net Height H (in)	HD Bolt Dia (in) and Grade [6]	Applied Axial Load [3]	Seismic			Wind		
				Allowable In-Plane Shear V [5] (lbs)	Drift at V [5] (in.)	Uplift at V [4, 5] (lbs)	Allowable In-Plane Shear V [5] (lbs)	Drift at V [5] (in.)	Uplift at V [4, 5] (lbs)
HFX-24x78	78	1 1/8" STD	1,000	3,830	0.257	14,700	5,105	0.371	19,770
			3,500	3,830	0.265	13,395	4,385	0.318	15,610
			6,500	3,270	0.231	9,610	3,270	0.231	9,610
		1 1/8" HS	1,000	4,765	0.341	18,420	5,315	0.392	20,610
			3,500	4,385	0.319	15,610	4,385	0.319	15,610
			6,500	3,270	0.232	9,610	3,270	0.232	9,610
HFX-12x8	92 1/4	1 1/8" STD	1,000	1,065	0.404	11,060	1,355	0.512	14,205
			3,500	1,035	0.404	9,460	1,325	0.512	12,610
			6,500	995	0.404	7,545	1,185	0.475	9,610
HFX-15x8	92 1/4	1 1/8" STD	1,000	1,355	0.404	11,245	1,730	0.512	14,490
			3,500	1,325	0.404	9,620	1,700	0.512	12,865
			6,500	1,290	0.404	7,680	1,510	0.468	9,610
HFX-18x8	92 1/4	1 1/8" STD	1,000	2,275	0.404	14,875	2,740	0.512	18,030
			3,500	2,215	0.404	13,145	2,580	0.493	15,610
			6,500	1,930	0.360	9,610	1,930	0.360	9,610
HFX-21x8	92 1/4	1 1/8" STD	1,000	2,845	0.404	15,260	3,425	0.512	18,475
			3,500	2,760	0.404	13,480	3,145	0.477	15,610
			6,500	2,350	0.348	9,610	2,350	0.348	9,610
HFX-24x8	92 1/4	1 1/8" STD	1,000	3,420	0.319	15,555	4,495	0.460	20,610
			3,500	3,420	0.335	14,250	3,710	0.373	15,610
			6,500	2,765	0.271	9,610	2,765	0.272	9,610
		1 1/8" HS	1,000	4,060	0.404	18,555	4,495	0.461	20,610
			3,500	3,710	0.374	15,610	3,710	0.374	15,610
			6,500	2,765	0.272	9,610	2,765	0.272	9,610
HFX-32x8	92 1/4	7/8" STD	1,000	2,135	0.321	8,040	2,135	0.321	8,040
			3,500	1,470	0.238	5,540	1,470	0.237	5,540
			6,500	675	0.145	2,540	675	0.145	2,540
HFX-44x8	92 1/4	7/8" STD	1,000	2,950	0.277	7,610	3,215	0.272	8,295
			3,500	2,245	0.195	5,795	2,245	0.195	5,795
			6,500	1,085	0.122	2,795	1,085	0.122	2,795
		7/8" HS	1,000	3,215	0.272	8,295	3,215	0.272	8,295
			3,500	2,245	0.195	5,795	2,245	0.195	5,795
			6,500	1,085	0.122	2,795	1,085	0.122	2,795
HFX-12x9	104 1/4	1 1/8" STD	1,000	950	0.456	11,135	1,205	0.579	14,305
			3,500	920	0.456	9,535	1,180	0.579	12,705
			6,500	885	0.456	7,615	1,050	0.533	9,610
HFX-15x9	104 1/4	1 1/8" STD	1,000	1,185	0.456	11,065	1,510	0.579	14,265
			3,500	1,155	0.456	9,450	1,480	0.579	12,650
			6,500	1,125	0.456	7,510	1,340	0.537	9,610
HFX-18x9	104 1/4	1 1/8" STD	1,000	2,020	0.456	14,930	2,430	0.579	18,080
			3,500	1,965	0.456	13,185	2,285	0.556	15,610
			6,500	1,710	0.405	9,610	1,710	0.405	9,610
HFX-21x9	104 1/4	1 1/8" STD	1,000	2,480	0.456	15,015	2,995	0.579	18,260
			3,500	2,415	0.456	13,305	2,785	0.547	15,610
			6,500	2,080	0.399	9,610	2,080	0.399	9,610
HFX-24x9	104 1/4	1 1/8" STD	1,000	3,140	0.378	16,160	3,980	0.517	20,610
			3,500	3,140	0.395	14,850	3,285	0.420	15,610
			6,500	2,450	0.305	9,610	2,450	0.305	9,610
		1 1/8" HS	1,000	3,605	0.456	18,625	3,980	0.518	20,610
			3,500	3,285	0.421	15,610	3,285	0.421	15,610
			6,500	2,450	0.306	9,610	2,450	0.306	9,610
HFX-32x9	104 1/4	7/8" STD	1,000	1,890	0.378	8,040	1,890	0.378	8,040
			3,500	1,300	0.279	5,540	1,300	0.279	5,540
			6,500	595	0.168	2,540	595	0.168	2,540
HFX-44x9	104 1/4	7/8" STD	1,000	2,845	0.321	8,005	2,845	0.318	8,295
			3,500	1,990	0.227	5,795	1,990	0.227	5,795
			6,500	960	0.141	2,795	960	0.141	2,795
HFX-12x10	116 1/4	1 1/8" STD	1,000	855	0.509	11,195	1,090	0.646	14,390
			3,500	830	0.508	9,595	1,065	0.646	12,790
			6,500	800	0.509	7,675	940	0.592	9,610
HFX-15x10	116 1/4	1 1/8" STD	1,000	1,045	0.509	10,910	1,335	0.646	14,065
			3,500	1,025	0.509	9,295	1,310	0.646	12,450
			6,500	995	0.509	7,360	1,200	0.606	9,610
HFX-18x10	116 1/4	1 1/8" STD	1,000	1,825	0.509	15,040	2,190	0.646	18,165
			3,500	1,770	0.509	13,255	2,050	0.616	15,610
			6,500	1,530	0.449	9,610	1,530	0.449	9,610
HFX-21x10	116 1/4	1 1/8" STD	1,000	2,190	0.509	14,795	2,660	0.646	18,065
			3,500	2,145	0.509	13,145	2,495	0.618	15,610
			6,500	1,865	0.451	9,610	1,865	0.451	9,610
HFX-24x10	116 1/4	1 1/8" STD	1,000	2,900	0.436	16,655	3,565	0.573	20,610
			3,500	2,900	0.456	15,350	2,945	0.465	15,610
			6,500	2,195	0.338	9,610	2,195	0.338	9,610
		1 1/8" HS	1,000	3,240	0.509	18,680	3,565	0.575	20,610
			3,500	2,945	0.467	15,610	2,945	0.467	15,610
			6,500	2,195	0.340	9,610	2,195	0.340	9,610
HFX-32x10	116 1/4	7/8" STD	1,000	1,695	0.439	8,040	1,695	0.439	8,040
			3,500	1,170	0.323	5,540	1,170	0.323	5,540
			6,500	535	0.193	2,540	535	0.193	2,540

ICC-ES® Most Widely Accepted and Trusted

TABLE 1.3A—*Hardy Frame*® INSTALLATION - ON UPPER FLOORS[1,2] (CONTINUED)

Model Number	Net Height H (in)	HD Bolt Dia (in) and Grade [6]	Applied Axial Load [3]	Seismic			Wind		
				Allowable In-Plane Shear V [5] (lbs)	Drift at V [5] (in.)	Uplift at V [4, 5] (lbs)	Allowable In-Plane Shear V [5] (lbs)	Drift at V [5] (in.)	Uplift at V [4, 5] (lbs)
HFX-44x10	116 1/4	7/8" STD	1,000	2,550	0.367	8,295	2,550	0.366	8,295
			3,500	1,785	0.262	5,795	1,785	0.262	5,795
			6,500	860	0.162	2,795	860	0.162	2,795
HFX-15x11	128 1/4	1 1/8" STD	1,000	940	0.561	10,785	1,195	0.712	13,885
			3,500	915	0.561	9,175	1,175	0.712	12,270
			6,500	890	0.561	7,240	1,090	0.677	9,610
HFX-18x11	128 1/4	1 1/8" STD	1,000	1,660	0.561	15,100	1,985	0.712	18,160
			3,500	1,610	0.561	13,300	1,855	0.680	15,610
			6,500	1,390	0.493	9,610	1,390	0.495	9,610
HFX-21x11	128 1/4	1 1/8" STD	1,000	1,960	0.561	14,600	2,385	0.712	17,885
			3,500	1,925	0.561	13,005	2,260	0.690	15,610
			6,500	1,690	0.504	9,610	1,690	0.504	9,610
HFX-24x11	128 1/4	1 1/8" STD	1,000	2,695	0.496	17,090	3,235	0.629	20,610
			3,500	2,670	0.511	15,610	2,670	0.510	15,610
			6,500	1,990	0.372	9,610	1,990	0.371	9,610
		1 1/8" HS	1,000	2,960	0.561	18,815	3,235	0.630	20,610
			3,500	2,670	0.511	15,610	2,670	0.511	15,610
			6,500	1,990	0.371	9,610	1,990	0.372	9,610
HFX-32x11	128 1/4	7/8" STD	1,000	1,535	0.503	8,040	1,535	0.504	8,040
			3,500	1,060	0.370	5,540	1,060	0.370	5,540
			6,500	485	0.219	2,540	485	0.219	2,540
HFX-44x11	128 1/4	7/8" STD	1,000	2,315	0.419	8,295	2,315	0.418	8,295
			3,500	1,615	0.299	5,795	1,615	0.298	5,795
			6,500	780	0.183	2,795	780	0.183	2,795
HFX-15x12	140 1/4	1 1/8" STD	1,000	850	0.614	10,655	1,080	0.779	13,720
			3,500	830	0.613	9,045	1,060	0.779	12,110
			6,500	805	0.613	7,115	995	0.748	9,610
HFX-18x12	140 1/4	1 1/8" STD	1,000	1,525	0.614	15,165	1,825	0.779	18,275
			3,500	1,480	0.614	13,350	1,695	0.738	15,610
			6,500	1,270	0.537	9,610	1,270	0.537	9,610
HFX-21x12	140 1/4	1 1/8" STD	1,000	1,705	0.614	13,845	2,100	0.779	17,195
			3,500	1,675	0.614	12,290	2,045	0.779	15,390
			6,500	1,545	0.579	9,610	1,545	0.579	9,610
HFX-24x12	140 1/4	1 1/8" STD	1,000	2,515	0.554	17,450	2,955	0.686	20,610
			3,500	2,440	0.556	15,610	2,440	0.557	15,610
			6,500	1,820	0.404	9,610	1,820	0.405	9,610
		1 1/8" HS	1,000	2,715	0.614	18,870	2,955	0.686	20,610
			3,500	2,440	0.557	15,610	2,440	0.557	15,610
			6,500	1,820	0.405	9,610	1,820	0.405	9,610
HFX-32x12	140 1/4	7/8" STD	1,000	1,405	0.572	8,040	1,405	0.573	8,040
			3,500	970	0.419	5,540	970	0.420	5,540
			6,500	445	0.247	2,540	445	0.247	2,540
HFX-44x12	140 1/4	7/8" STD	1,000	2,115	0.472	8,295	2,115	0.472	8,295
			3,500	1,480	0.337	5,795	1,480	0.337	5,795
			6,500	715	0.205	2,795	715	0.205	2,795
HFX-15x13	152 1/4	1 1/8" STD	1,000	775	0.666	10,535	985	0.846	13,565
			3,500	755	0.666	8,930	965	0.846	11,960
			6,500	735	0.666	7,000	915	0.821	9,610
HFX-18x13	152 1/4	1 1/8" STD	1,000	1,410	0.666	15,250	1,690	0.846	18,340
			3,500	1,365	0.666	13,400	1,565	0.797	15,610
			6,500	1,170	0.580	9,610	1,170	0.580	9,610
HFX-21x13	152 1/4	1 1/8" STD	1,000	1,555	0.666	13,725	1,925	0.846	17,080
			3,500	1,530	0.666	12,175	1,870	0.846	15,280
			6,500	1,425	0.633	9,610	1,425	0.633	9,610
HFX-24x13	152 1/4	1 1/8" STD	1,000	2,360	0.616	17,785	2,725	0.742	20,610
			3,500	2,250	0.603	15,610	2,250	0.602	15,610
			6,500	1,675	0.438	9,610	1,675	0.438	9,610
		1 1/8" HS	1,000	2,505	0.666	18,915	2,725	0.742	20,610
			3,500	2,250	0.602	15,610	2,250	0.603	15,610
			6,500	1,675	0.438	9,610	1,675	0.438	9,610
HFX-32x13	152 1/4	7/8" STD	1,000	1,295	0.645	8,040	1,295	0.645	8,040
			3,500	890	0.471	5,540	890	0.471	5,540
			6,500	410	0.275	2,540	410	0.275	2,540
HFX-44x13	152 1/4	7/8" STD	1,000	1,950	0.530	8,295	1,950	0.530	8,295
			3,500	1,360	0.378	5,795	1,360	0.378	5,795
			6,500	655	0.228	2,795	655	0.229	2,795

For **SI:** 1 inch = 25.4 mm, 1 lbf = 4.45 N

Notes

1) The values in this table are based on Allowable Stress Design (ASD) and pertain to installation on Upper Floor Systems that bear on wood frame walls below. In accordance with Section 4.1.1, the tabulated values in this table are applicable only to those details in Figures 2 and 3, which match the support conditions described in Section 4.1.1 and in the footnotes of this table, including details 6, 10, 13, 14, 18, 21, 31, 34, 35, 36 and 37. For details 10, 34 and 36, the tabulated allowable in-plane shear values and drift values are for in-plane lateral shear forces applied to the top of the panels/brace frames, and the strength and drift of the complete lateral-force-resisting system must be determined by the building design professional in accordance with Section 4.1.1 by considering the effects of the additional members/connections at top of the panels/brace frames.
2) Upper Floor System for Panels assumes double 2x wood plates in the wall below, Engineered Wood Product (EWP) rim board (Fc = 680 psi) up to 12 inches deep with a Hardy Frame® Bearing Plate installed below. For EWP rim boards up to 18 inches deep the allowable shear value must be multiplied by 0.96 for 12-inch-wide panels and 0.98 for 15- thru 24-inch panels. For all panels, the corresponding drift is unchanged. Upper Floor System for Brace Frames assumes double 2x wood plates in the wall below, EWP rim board up to 12 inches deep with Fc = 680 psi, floor sheathing and a 2x wood bottom plate with Fc = 625 psi below the brace frames. For EWP rim boards up to 18 inch deep the allowable shear value does not change and the corresponding drift must be multiplied by 1.03.
3) The applied vertical axial loads are concurrent with the allowable shear load. For Panels the axial load must be applied within the middle 1/3 of the Panel width or be uniformly distributed across the entire Panel width. For Brace Frame the axial load is acting along the centerline of the post.
4) The Uplift values listed assume no resisting axial load. To determine the anchor tension load in Panels at design shear values and including the effect of axial loads, the tension load equals uplift minus P/2, where P is the axial load on the Panel. For Brace Frames the anchor tension load equals uplift minus P where P is the axial load on the Post.
5) Allowable shear, drift and uplift values may be linearly interpolated for intermediate height or axial loads.
6) STD indicates bolts complying with ASTM F1554 Grade 36. HS indicates bolts complying with a high strength steel specification as set forth in Section 3.8.4 of this Report.

TABLE 2.1A HARDY FRAME® HFX/S INSTALLATION - ON 2500 PSI CONCRETE[1,2]

Model Number	Net Height H (in)	HD Bolt Dia (in) and Grade [6]	Applied Axial Load [3]	Seismic				Wind		
				Allowable In-Plane Shear V [5] (lbs)	Drift at V [5] (in.)	Uplift at V [4,5] (lbs)	Required Strength, R_U[7] (lbs)	Allowable In-Plane Shear V [5] (lbs)	Drift at V [5] (in.)	Uplift at V [4,5] (lbs)
HFX/S-9x8	96 5/8	1 1/8" STD	2,000	770	0.258	15,510	1,925	770	0.258	15,510
HFX/S-12x8	96 5/8	1 1/8" STD	1,000	1,410	0.213	19,595	3,525	1,410	0.213	19,595
			3,500	1,300	0.197	17,005		1,300	0.197	17,005
			6,500	1,160	0.176	14,320		1,160	0.176	14,320
		1 1/8" HS	1,000	1,410	0.214	19,595	3,525	1,410	0.214	19,595
			3,500	1,300	0.198	17,005		1,300	0.198	17,005
			6,500	1,160	0.177	14,320		1,160	0.177	14,320
HFX/S-15x8	96 5/8	1 1/8" STD	1,000	1,955	0.330	21,615	4,890	1,955	0.327	21,615
			3,500	1,945	0.327	21,380		1,945	0.325	21,380
			6,500	1,900	0.320	20,560		1,900	0.318	20,560
		1 1/8" HS	1,000	2,305	0.388	31,340	5,765	2,305	0.388	31,340
			3,500	2,160	0.364	26,150		2,160	0.364	26,150
			6,500	1,955	0.330	21,625		1,955	0.330	21,625
HFX/S-18x8	96 5/8	1 1/8" STD	1,000	2,625	0.218	21,615	6,565	2,625	0.218	21,615
			3,500							
			6,500							
		1 1/8" HS	1,000	3,570	0.298	39,500	8,925	3,570	0.299	39,500
			3,500	3,385	0.283	33,700		3,385	0.284	33,700
			6,500	3,135	0.262	28,745		3,135	0.263	28,745
HFX/S-21x8	96 5/8	1 1/8" STD	1,000	3,210	0.272	21,090	8,025	3,210	0.272	21,090
			3,500							
			6,500							
		1 1/8" HS	1,000	4,970	0.423	43,265	12,425	5,030	0.428	44,825
			3,500	4,875	0.415	41,070		4,875	0.415	41,070
			6,500	4,595	0.391	36,045		4,595	0.391	36,045
HFX/S-24x8	96 5/8	1 1/8" STD	1,000	3,420	0.151	18,010	8,550	3,730	0.165	20,005
			3,500							
			6,500							
		1 1/8" HS	1,000	5,910	0.263	38,175	14,775	6,450	0.288	45,290
			3,500					6,360	0.284	43,925
			6,500					6,210	0.277	41,850
HFX/S-24x9	108 5/8	1 1/8" STD	1,000	3,140	0.175	18,710	7,850	3,385	0.191	20,745
			3,500							
			6,500							
		1 1/8" HS	1,000	5,230	0.294	37,830	13,075	5,775	0.325	45,935
			3,500					5,675	0.319	44,165
			6,500					5,525	0.311	41,850

ICC-ES® Most Widely Accepted and Trusted

TABLE 2.1A—HARDY FRAME® HFX/S INSTALLATION - ON 2500 PSI CONCRETE[1,2] (CONTINUED)

HFX/S-32x9	108 5/8	7/8" STD	1,000	2,100	0.174	8,945	5,250	2,500	0.207	10,630
			3,500	1,910	0.158	8,130		1,910	0.158	8,130
			6,500	1,205	0.100	5,130		1,205	0.100	5,130
		7/8" HS	1,000	2,655	0.220	11,295	6,640	2,655	0.220	11,295
			3,500	2,065	0.171	8,795		2,065	0.171	8,795
			6,500	1,360	0.113	5,795		1,360	0.113	5,795
HFX/S-44x9	108 5/8	7/8" STD	1,000	2,635	0.116	7,680	6,590	3,405	0.151	9,930
			3,500					2,870	0.127	8,365
			6,500	1,840	0.081	5,365		1,840	0.081	5,365
		7/8" HS	1,000	3,995	0.177	11,645	9,990	3,995	0.177	11,645
			3,500	3,135	0.139	9,145		3,135	0.139	9,145
			6,500	2,105	0.093	6,145		2,105	0.093	6,145
HFX/S-12x10	120 5/8	1 1/8" STD	1,000	1,130	0.263	19,595	2,825	1,130	0.263	19,595
			3,500	1,040	0.243	17,005		1,040	0.243	17,005
			6,500	930	0.217	14,325		930	0.217	14,325
		1 1/8" HS	1,000	1,130	0.265	19,595	2,825	1,130	0.265	19,595
			3,500	1,040	0.244	17,005		1,040	0.244	17,005
			6,500	930	0.218	14,325		930	0.218	14,325
HFX/S-15x10	120 5/8	1 1/8" STD	1,000	1,565	0.434	21,620	3,915	1,565	0.431	21,620
			3,500	1,555	0.431	21,380		1,555	0.428	21,380
			6,500	1,520	0.421	20,560		1,520	0.418	20,560
		1 1/8" HS	1,000	1,845	0.511	31,340	4,615	1,845	0.511	31,340
			3,500	1,730	0.479	26,150		1,730	0.479	26,150
			6,500	1,565	0.434	21,625		1,565	0.434	21,625
HFX/S-18x10	120 5/8	1 1/8" STD	1,000	2,105	0.272	21,615	5,265	2,105	0.272	21,615
			3,500							
			6,500							
		1 1/8" HS	1,000	2,860	0.372	39,500	7,150	2,860	0.372	39,500
			3,500	2,715	0.353	33,700		2,715	0.353	33,700
			6,500	2,515	0.327	28,745		2,515	0.327	28,745
HFX/S-21x10	120 5/8	1 1/8" STD	1,000	2,640	0.364	21,620	6,600	2,640	0.364	21,620
			3,500							
			6,500							
		1 1/8" HS	1,000	3,780	0.528	38,105	9,450	4,030	0.562	44,825
			3,500					3,905	0.545	41,070
			6,500	3,680	0.514	36,045		3,680	0.514	36,045
HFX/S-24x10	120 5/8	1 1/8" STD	1,000	2,900	0.199	19,290	7,250	3,150	0.216	21,385
			3,500					3,115	0.214	21,080
			6,500					3,105	0.213	20,985
		1 1/8" HS	1,000	4,690	0.325	37,530	11,725	5,200	0.360	45,935
			3,500					5,110	0.353	44,165
			6,500					4,975	0.344	41,850

ICC-ES® Most Widely Accepted and Trusted

TABLE 2.1A—HARDY FRAME® HFX/S INSTALLATION - ON 2500 PSI CONCRETE[1,2] (CONTINUED)

HFX/S-32x10	120 5/8	7/8" STD	1,000		1,955	0.222	9,285	4,890		2,240	0.254	10,630
			3,500		1,715	0.194	8,130			1,715	0.194	8,130
			6,500		1,080	0.122	5,130			1,080	0.122	5,130
		7/8" HS	1,000		2,380	0.270	11,295	5,950		2,380	0.269	11,295
			3,500		1,855	0.210	8,795			1,855	0.210	8,795
			6,500		1,220	0.138	5,795			1,220	0.138	5,795
HFX/S-44x10	120 5/8	7/8" STD	1,000		2,475	0.148	8,055	6,190		3,185	0.191	10,355
			3,500							2,575	0.154	8,365
			6,500		1,650	0.099	5,365			1,650	0.099	5,365
		7/8" HS	1,000		3,580	0.214	11,645	8,950		3,580	0.214	11,645
			3,500		2,810	0.168	9,145			2,810	0.168	9,145
			6,500		1,890	0.113	6,145			1,890	0.113	6,145
HFX/S-15x11	132 5/8	1 1/8" STD	1,000		1,425	0.486	21,615	3,565		1,425	0.485	21,615
			3,500		1,415	0.483	21,380			1,415	0.482	21,380
			6,500		1,385	0.471	20,560			1,385	0.471	20,560
		1 1/8" HS	1,000		1,680	0.573	31,340	4,200		1,680	0.573	31,340
			3,500		1,575	0.536	26,150			1,575	0.536	26,150
			6,500		1,425	0.486	21,625			1,425	0.486	21,625
HFX/S-18x11	132 5/8	1 1/8" STD	1,000		1,915	0.298	21,615	4,790		1,915	0.301	21,615
			3,500									
			6,500									
		1 1/8" HS	1,000		2,600	0.406	39,500	6,500		2,600	0.406	39,500
			3,500		2,470	0.385	33,700			2,470	0.385	33,700
			6,500		2,285	0.357	28,745			2,285	0.357	28,745
HFX/S-21x11	132 5/8	1 1/8" STD	1,000		2,405	0.410	21,620	6,015		2,405	0.410	21,620
			3,500									
			6,500									
		1 1/8" HS	1,000		3,365	0.580	36,380	8,415		3,665	0.632	44,825
			3,500							3,555	0.613	41,070
			6,500		3,345	0.577	36,045			3,345	0.577	36,045
HFX/S-24x11	132 5/8	1 1/8" STD	1,000		2,695	0.223	19,805	6,740		2,890	0.238	21,615
			3,500							2,880	0.237	21,500
			6,500							2,870	0.236	21,390
		1 1/8" HS	1,000		3,730	0.308	30,420	9,325		4,730	0.391	45,935
			3,500							4,645	0.384	44,165
			6,500							4,525	0.374	41,850
HFX/S-32x11	132 5/8	7/8" STD	1,000		1,830	0.276	9,595	4,575		2,030	0.306	10,630
			3,500		1,555	0.234	8,130			1,555	0.234	8,130
			6,500		980	0.147	5,130			980	0.148	5,130
		7/8" HS	1,000		2,160	0.325	11,295	5,400		2,160	0.325	11,295
			3,500		1,680	0.253	8,795			1,680	0.253	8,795
			6,500		1,105	0.167	5,795			1,105	0.167	5,795

ICC-ES® Most Widely Accepted and Trusted

TABLE 2.1A—HARDY FRAME® HFX/S INSTALLATION - ON 2500 PSI CONCRETE[1,2] (CONTINUED)

HFX/S-44x11	132 5/8	7/8" STD	1,000		2,335	0.185	8,380	5,840		2,990	0.236	10,730
			3,500		2,330	0.184	8,365			2,330	0.184	8,365
			6,500		1,495	0.118	5,365			1,495	0.118	5,365
		7/8" HS	1,000		3,245	0.255	11,645	8,115		3,245	0.256	11,645
			3,500		2,550	0.201	9,145			2,550	0.201	9,145
			6,500		1,715	0.135	6,145			1,715	0.135	6,145
HFX/S-15x12	144 5/8	1 1/8" STD	1,000		1,305	0.541	21,615	3,265		1,305	0.540	21,615
			3,500		1,300	0.537	21,380			1,300	0.536	21,380
			6,500		1,270	0.525	20,560			1,270	0.524	20,560
		1 1/8" HS	1,000		1,530	0.633	30,485	3,825		1,540	0.638	31,340
			3,500		1,445	0.597	26,150			1,445	0.597	26,150
			6,500		1,305	0.541	21,625			1,305	0.541	21,625
HFX/S-18x12	144 5/8	1 1/8" STD	1,000		1,755	0.324	21,615	4,390		1,755	0.324	21,615
			3,500									
			6,500									
		1 1/8" HS	1,000		2,385	0.442	39,500	5,965		2,385	0.442	39,500
			3,500		2,265	0.419	33,700			2,265	0.419	33,700
			6,500		2,095	0.388	28,745			2,095	0.388	28,745
HFX/S-21x12	144 5/8	1 1/8" STD	1,000		2,205	0.456	21,615	5,515		2,205	0.456	21,615
			3,500									
			6,500									
		1 1/8" HS	1,000		3,030	0.633	35,115	7,575		3,360	0.702	44,825
			3,500							3,260	0.681	41,070
			6,500							3,070	0.641	36,045
HFX/S-24x12	144 5/8	1 1/8" STD	1,000		2,515	0.246	20,235	6,290		2,650	0.260	21,615
			3,500									
			6,500									
		1 1/8" HS	1,000		3,410	0.334	30,285	8,525		4,335	0.425	45,935
			3,500							4,260	0.418	44,165
			6,500							4,150	0.407	41,850
HFX/S-32x12	144 5/8	7/8" STD	1,000		1,720	0.337	9,855	4,300		1,855	0.364	10,630
			3,500		1,420	0.278	8,130			1,420	0.278	8,130
			6,500		895	0.175	5,130			895	0.175	5,130
		7/8" HS	1,000		1,975	0.386	11,295	4,940		1,975	0.386	11,295
			3,500		1,535	0.300	8,795			1,535	0.300	8,795
			6,500		1,010	0.198	5,795			1,010	0.198	5,795
HFX/S-44x12	144 5/8	7/8" STD	1,000		2,210	0.224	8,675	5,525		2,770	0.281	10,865
			3,500		2,135	0.216	8,365			2,135	0.216	8,365
			6,500		1,370	0.139	5,365			1,370	0.139	5,365
		7/8" HS	1,000		2,970	0.301	11,645	7,425		2,970	0.302	11,645
			3,500		2,330	0.237	9,145			2,330	0.237	9,145
			6,500		1,565	0.159	6,145			1,565	0.159	6,145

TABLE 2.1A—HARDY FRAME® HFX/S INSTALLATION - ON 2500 PSI CONCRETE[1,2] (CONTINUED)

HFX/S-15x13	156 5/8	1 1/8" STD	1,000		1,205	0.597	21,615	3,015		1,205	0.597	21,615
			3,500		1,200	0.593	21,380			1,200	0.593	21,380
			6,500		1,170	0.579	20,560			1,170	0.579	20,560
		1 1/8" HS	1,000		1,385	0.685	28,750	3,465		1,420	0.704	31,340
			3,500		1,330	0.659	26,150			1,330	0.659	26,150
			6,500		1,205	0.597	21,625			1,205	0.597	21,625
HFX/S-18x13	156 5/8	1 1/8" STD	1,000		1,620	0.348	21,615	4,050		1,620	0.348	21,615
			3,500									
			6,500									
		1 1/8" HS	1,000		2,205	0.477	39,500	5,515		2,205	0.477	39,500
			3,500		2,090	0.452	33,700			2,090	0.452	33,700
			6,500		1,935	0.419	28,745			1,935	0.419	28,745
HFX/S-21x13	156 5/8	1 1/8" STD	1,000		2,035	0.503	21,615	5,090		2,035	0.503	21,615
			3,500									
			6,500									
		1 1/8" HS	1,000		2,745	0.685	33,895	6,865		3,105	0.775	44,825
			3,500							3,010	0.751	41,070
			6,500							2,835	0.708	36,045
HFX/S-24x13	156 5/8	1 1/8" STD	1,000		2,360	0.271	20,645	5,900		2,450	0.281	21,615
			3,500									
			6,500									
		1 1/8" HS	1,000		3,140	0.360	30,160	7,850		4,005	0.459	45,935
			3,500							3,935	0.451	44,165
			6,500							3,830	0.440	41,850
HFX/S-32x13	156 5/8	7/8" STD	1,000		1,625	0.403	10,090	4,065		1,710	0.425	10,630
			3,500		1,310	0.325	8,130			1,310	0.325	8,130
			6,500		825	0.205	5,130			825	0.205	5,130
		7/8" HS	1,000		1,820	0.452	11,295	4,550		1,820	0.452	11,295
			3,500		1,415	0.352	8,795			1,415	0.352	8,795
			6,500		935	0.232	5,795			935	0.232	5,795
HFX/S-44x13	156 5/8	7/8" STD	1,000		2,100	0.269	8,940	5,250		2,550	0.327	10,865
			3,500		1,965	0.252	8,365			1,965	0.252	8,365
			6,500		1,260	0.162	5,365			1,260	0.162	5,365
		7/8" HS	1,000		2,735	0.351	11,645	6,840		2,735	0.351	11,645
			3,500		2,145	0.275	9,145			2,145	0.275	9,145
			6,500		1,445	0.185	6,145			1,445	0.185	6,145

For **SI**: 1 inch = 25.4 mm, 1 foot = 304.8 mm, 1 lb = 4.45 N, 1 psi 6.89 kPa.

Notes

1) The values in this table are based on Allowable Stress Design (ASD) pertain to installation on 2500 psi normal weight concrete or nut & washer with 5,000 psi minimum non-shrink grout in accordance with Section 3.8.6 of this evaluation report. In accordance with Section 4.1.1, the tabulated values in this table are applicable only to those details in Figures 2 and 3, which match the support conditions described in Section 4.1.1 and in the footnotes of this table, including details 1, 4, 5, 9, 11, 19, 26, 27, 29, 1A/SP and 1A/SBF.
2) See Section 4.1.5 of this evaluation report for additional information.
3) The additional vertical axial loads are concurrent with the allowable shear load. For Panels the axial load must be applied within the middle 1/3 of the Panel width or be uniformly distributed across the entire Panel width. For Brace Frames the axial load is acting and along the centerline of the post.
4) Tabulated anchor tension (uplift) loads assume no resisting axial load. For Panels subjected to allowable in-plane lateral shear and concurrently applied axial compression loads, anchor tension loads at allowable shear values and including the effect of axial load, must be calculated in accordance with the applicable equation in Figure 5 of this evaluation report. For Brace Frames the anchor tension load equals to the tabulated uplift minus P, where P is the applicable applied axial load in the Post.
5) Allowable lateral shear, drift and uplift values may be linearly interpolated for intermediate height or axial loads In accordance with Section 4.1.1 of this report. Drift may be linearly reduced when an applied shear load is less than the allowable shear.
6) STD indicates bolts complying with ASTM F1554 Grade 36. HS indicates bolts complying with a high strength steel specification as set forth in Section 3.8.4 of this Report.
7) The available strength, R_n/Ω, for CFS collector element (top track or header) or concrete anchorage design within a seismic force-resisting system shall be greater than or equal to R_U.

TABLE 3.0—*Hardy Frame*® PANEL AND BRACE FRAME OUT-OF-PLANE DESIGN LOADS

***Hardy Frame*®** Product Width	Allowable Out-of-Plane Load (psf) [1, 2, 3, 5]						
	Nominal Height (H) of Panel or Brace Frame (ft) [4]						
	78 (inches) [6]	8	9	10	11	12	13
HFX 9 inch Panels	200	200	200	200	n/a	n/a	n/a
HFX 12 inch Panels	200	200	200	200	n/a	n/a	n/a
HFX 15 inch Panels	200	200	200	150	110	80	70
HFX 18 inch Panels	200	200	180	130	100	70	60
HFX 21 inch Panels	200	200	180	130	100	70	60
HFX 24 inch Panels	200	200	150	110	80	60	50
HFX 32 inch Brace Frame	n/a	90	65	50	35	30	25
HFX 44 inch Brace Frame	n/a	80	60	45	35	25	20

For **SI**: 1 inch = 25.4 mm, 1 lbf = 4.45 N

Notes

1) Allowable loads are limited to H/360 deflection using the applicable factor on the wind load in accordance with Table 1604.3 of the IBC. For deflection limit of H/240 multiply the allowable force from table by 360/240. The allowable force shall not exceed 200 psf.
2) The connection at top and bottom of Panels and Brace Frames must be designed and detailed for the design loads by the Building Design Professional.
3) Loads shown are based on Allowable Stress Design (ASD).
4) For Panels in Balloon Wall application, out-of-plane loads must be resisted by other framing members, which must be designed and detailed by the building design professional.
5) Computation of panel strength using applicable editions of AISI S100.
6) For 7 foot nominal wall heights, 9 inch Panels are 79-1/2" net height and all other Panel widths are 78" net height.

TABLE 4.1—*Hardy Frame*® POST [1]

Model Number	Net Height (in)	HD Dia (in)	Allowable Compression [2,3,4] (lbs)	STD Allowable Tension [5] (lbs)	HS Allowable Tension [5] (lbs)
HFP-Series					
HFP8-7/8	92 1/4	7/8	24,735	13,080	28,185
HFP8-1 1/8	92 1/4	1-1/8		21,620	35,275
HFP9-7/8	104 1/4	7/8	22,325	13,080	28,185
HFP9-1 1/8	104 1/4	1-1/8		21,620	35,275
HFP10-7/8	116 1/4	7/8	19,900	13,080	28,185
HFP10-1 1/8	116 1/4	1-1/8		21,620	35,275
HFP11-7/8	128 1/4	7/8	17,520	13,080	28,185
HFP11-1 1/8	128 1/4	1-1/8		21,620	35,275
HFP12-7/8	140 1/4	7/8	15,230	13,080	28,185
HFP12-1 1/8	140 1/4	1-1/8		21,620	35,275
HFP13-7/8	152 1/4	7/8	13,050	13,080	28,185
HFP13-1 1/8	152 1/4	1-1/8		21,620	35,275
HFP/S-Series					
HFP/S8-7/8	96 5/8	7/8	23,865	13,080	28,185
HFP/S8-1 1/8	96 5/8	1-1/8		21,620	35,275
HFP/S9-7/8	108 5/8	7/8	21,440	13,080	28,185
HFP/S9-1 1/8	108 5/8	1-1/8		21,620	35,275
HFP/S10-7/8	120 5/8	7/8	19,025	13,080	28,185
HFP/S10-1 1/8	120 5/8	1-1/8		21,620	35,275
HFP/S11-7/8	132 5/8	7/8	16,670	13,080	28,185
HFP/S11-1 1/8	132 5/8	1-1/8		21,620	35,275
HFP/S12-7/8	144 5/8	7/8	14,430	13,080	28,185
HFP/S12-1 1/8	144 5/8	1-1/8		21,620	35,275
HFP/S13-7/8	156 5/8	7/8	12,330	13,080	28,185
HFP/S13-1 1/8	156 5/8	1-1/8		21,620	35,275

For **SI**: 1 inch = 25.4 mm, 1 lbf = 4.45 N

Notes for Table 4.1 Hardy Frame Post:

1) The values in this table are based on Allowable Stress Design (ASD) and assume installations on a rigid base, or a nut and washer with non-shrink grout of 5000 psi minimum compressive strength in accordance with Section 3.8.6 of this Report.
2) The maximum allowable compression of the post must limited as follows:
   A) Wood with 625 psi allowable compression perpendicular to grain = 7,656 lbs.
   B) Wood with 680 psi allowable compression perpendicular to grain = 8,330 lbs.
   C) 2500 psi Concrete = 10,412 lbs.
   D) 3000 psi Concrete = 12,495 lbs.
3) For installation on supporting materials other than noted above, the Building Design Professional must check the Bearing Stress based on the Post bearing area of 12.25 square inches.
4) For compression loads exceeding the allowable bearing stress of the supporting material the Building Design Professional is permitted to design bearing plates to increase the bearing area in order to reduce the bearing stress.
5) STD indicates bolts complying with ASTM F1554 Grade 36. HS indicates bolts complying with a high strength steel specification as set forth in Section 3.8.4 of this Report.

ICC-ES® Most Widely Accepted and Trusted

TABLE 5.1—*Hardy Frame*® SADDLE [1,3,4,7]

Model Number	Fastener Qty [2]	Allowable Tension [5, 6] (lbs)	Allowable Compression (lbs)
HFS24	24-16d Common	2,950	2,500
HFS36	32-16d Common	4,280	2,500

For **SI**: 1 inch = 25.4 mm, 1 lbf = 4.45 N

Notes

1) The maximum notched section in the wood member is 4-1/2 inches.
2) Fastener quantity is the number of 16d Common nails to be installed into each of the members to be joined. Table 5.2 of this Report provides reductions of tabulated loads where other nail styles are used.
3) When the end distance from the joint to the first nail hole is less than 1-inch, omit the (2) nails in the 3-inch side-plate and the (1) nail in the 1-1/2 inch side-plate that are nearest the joint.
4) For the condition described above there is no reduction in values provided the HFS24 is installed with minimum 22-16d Common nails in each member being joined (44 total) and the HFS36 is installed with 31-16d Common nails in each member (62 total).
5) The allowable tension capacities are for normal duration. The values may be adjusted for other durations, such as for seismic and wind loading in accordance with the AWC NDS.
6) Allowable tension capacities assume the Saddle is attached to lumber members with a specific gravity of 0.49 or higher.
7) Loads shown are based on Allowable Stress Design (ASD).

TABLE 5.2—*HardyFrame*® SADDLE ALTERNATE FASTENERS

Table Nail	Replacement Nail Description		Use Percentage of Allowable Load
	Type	D x L (in)	
16d Common	16d Box	0.135 x 3-1/2	0.74
16d Common	N10 x 1.5	No. 9 ga x 1-1/2	0.69
16d Common	N16 x 2.5	No. 8 ga x 2-1/2	1.00
16d Common	16d Sinker	0.148 x 3-1/4	0.84
16d Common	10d Common	0.148 x 3	0.84
16d Common	12d Common	0.148 x 3-1/4	0.84

For **SI**: 1 inch = 25.4 mm, 1 lbf = 4.45 N

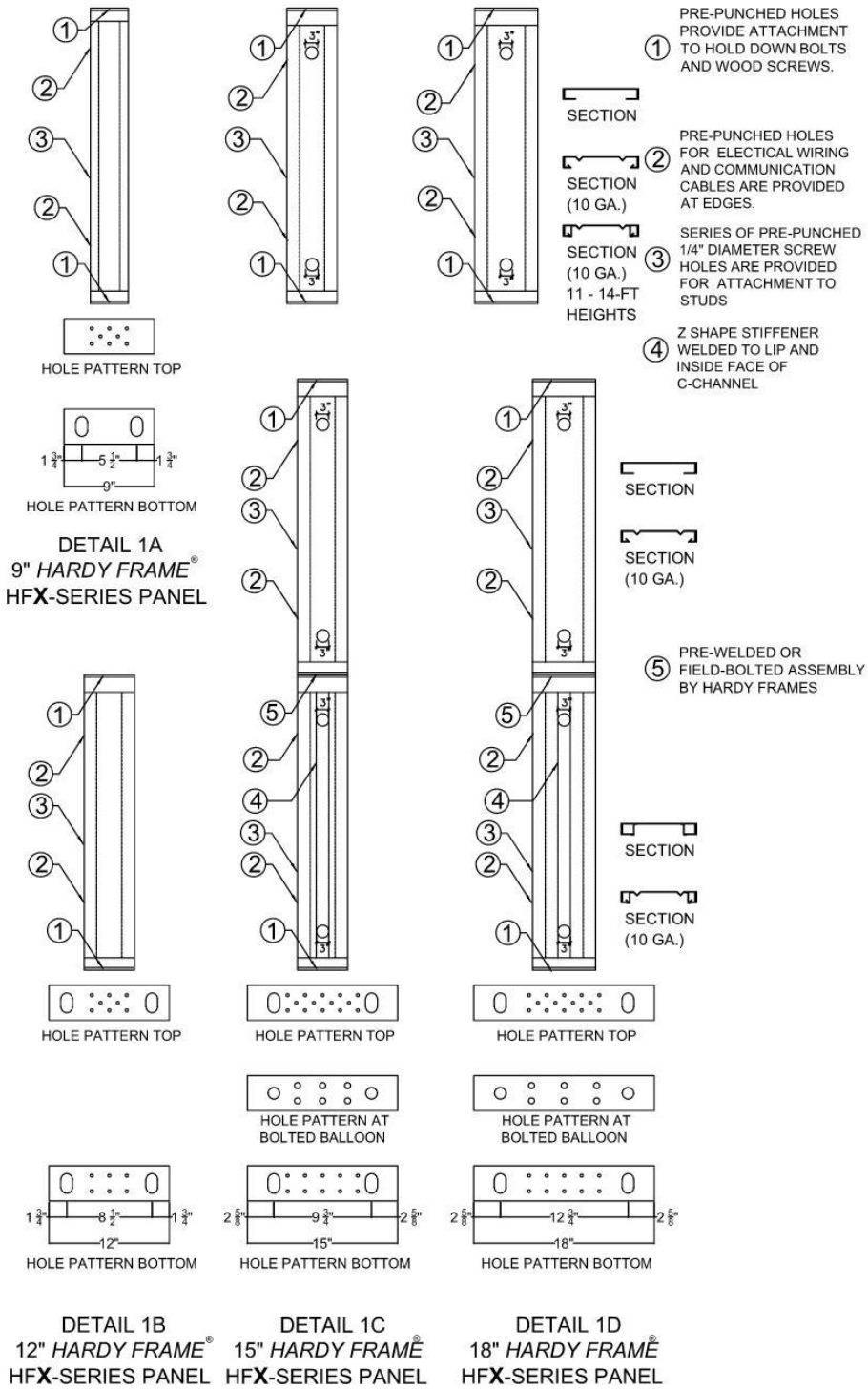
PRE-PUNCHED HOLES PROVIDE ATTACHMENT TO HOLD DOWN BOLTS AND WOOD SCREWS.
SECTION
PRE-PUNCHED HOLES FOR ELECTICAL WIRING AND COMMUNICATION CABLES ARE PROVIDED AT EDGES.
SECTION (10 GA.)
SERIES OF PRE-PUNCHED 1/4" DIAMETER SCREW HOLES ARE PROVIDED FOR ATTACHMENT TO STUDS
SECTION (10 GA.) 11 - 14-FT HEIGHTS
Z SHAPE STIFFENER WELDED TO LIP AND INSIDE FACE OF C-CHANNEL
HOLE PATTERN TOP
HOLE PATTERN BOTTOM
DETAIL 1A
9" HARDY FRAME®
HFX-SERIES PANEL
SECTION
SECTION (10 GA.)
PRE-WELDED OR FIELD-BOLTED ASSEMBLY BY HARDY FRAMES
SECTION
SECTION (10 GA.)
HOLE PATTERN TOP
HOLE PATTERN TOP
HOLE PATTERN TOP
HOLE PATTERN AT BOLTED BALLOON
HOLE PATTERN AT BOLTED BALLOON
HOLE PATTERN BOTTOM
HOLE PATTERN BOTTOM
HOLE PATTERN BOTTOM
DETAIL 1B
12" HARDY FRAME®
HFX-SERIES PANEL
DETAIL 1C
15" HARDY FRAME®
HFX-SERIES PANEL
DETAIL 1D
18" HARDY FRAME®
HFX-SERIES PANEL

FIGURE 1

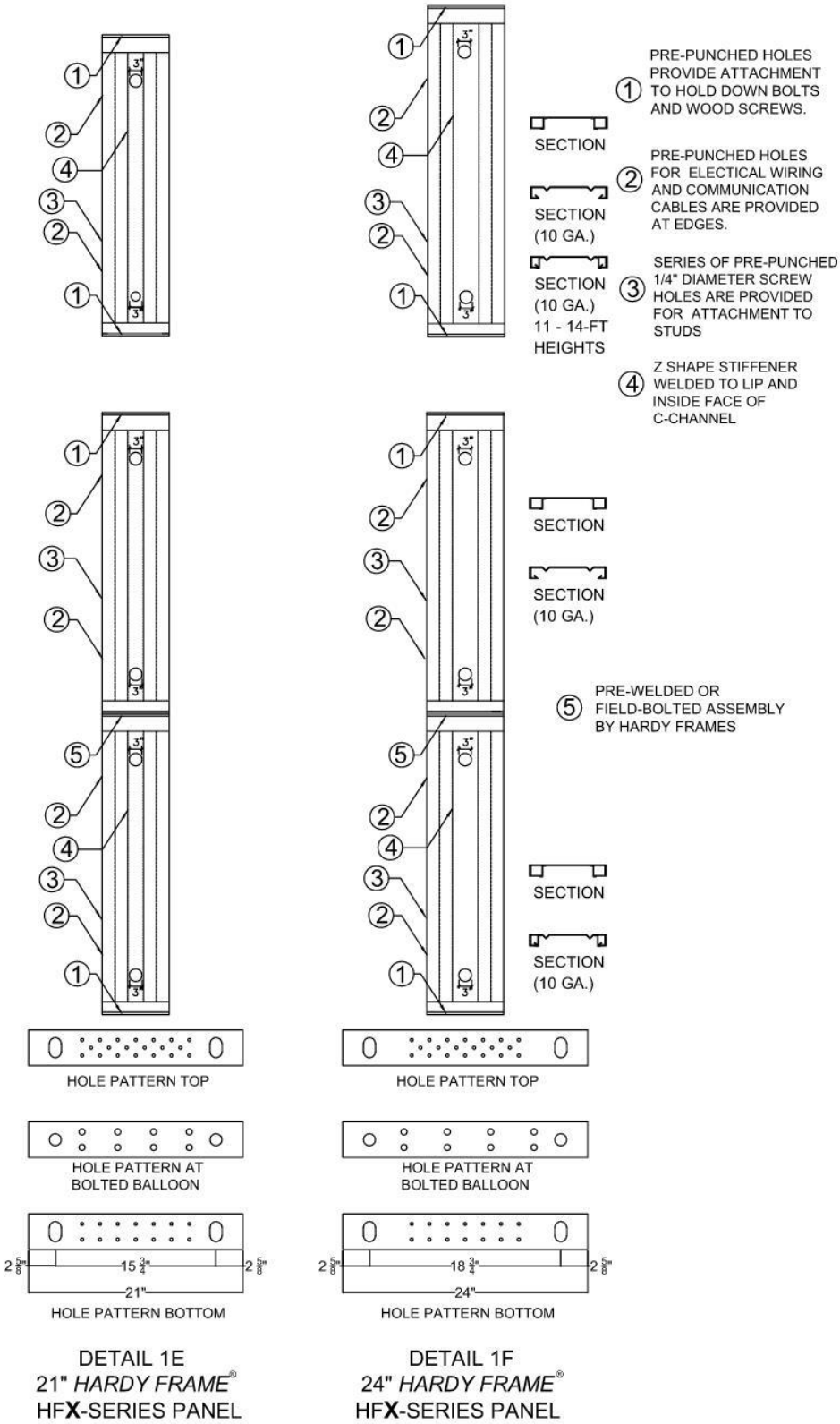

FIGURE 1 (Continued)

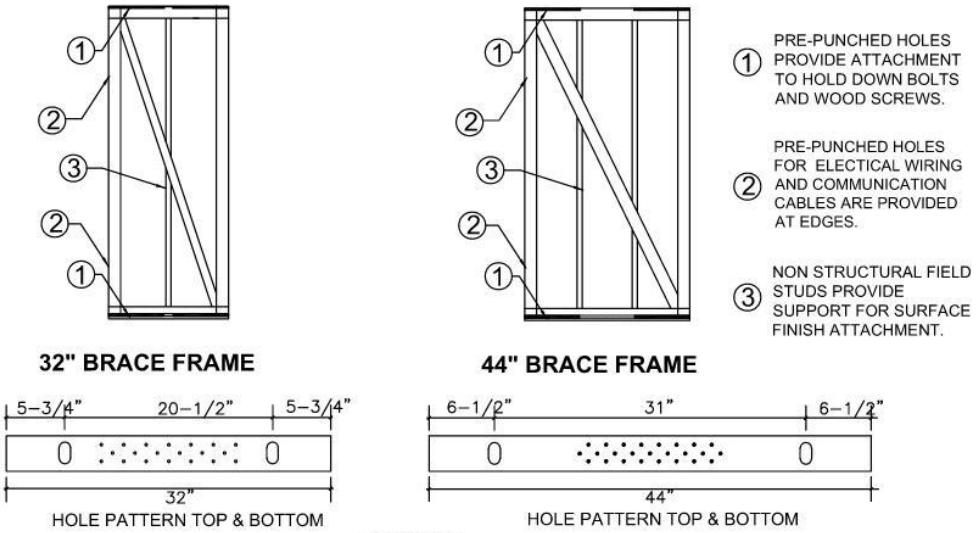

DETAIL 2
HARDY FRAME® HF**X**-SERIES BRACE FRAME

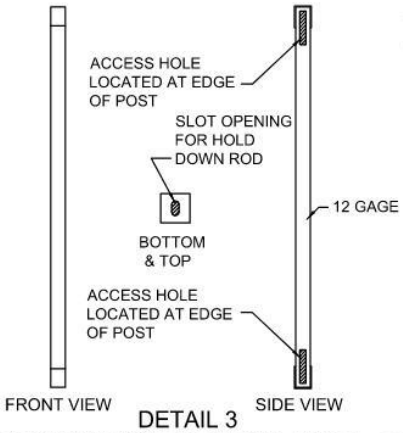

DETAIL 3
HARDY FRAME® HFP-SERIES POST

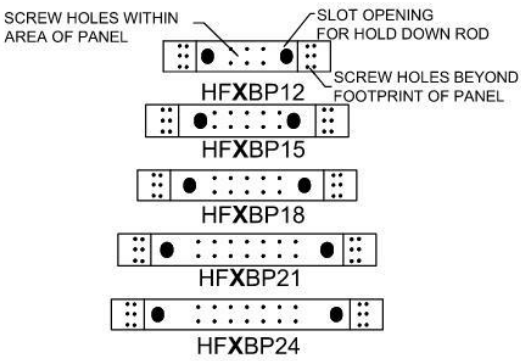

DETAIL 4
HARDY FRAME® HFX-SERIES BEARING PLATE

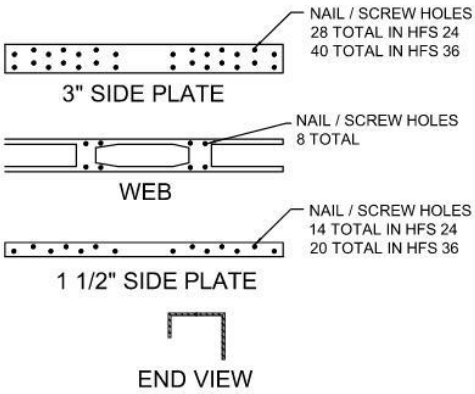

DETAIL 5
HARDY FRAME® SADDLE (HFS)

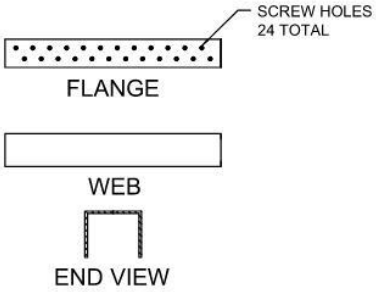

DETAIL 6
HARDY FRAME® FILLER BRACE (HFFB)

FIGURE 1 (Continued)

NOTES:
ATTACHMENTS MAY BE MADE AT SCREW HOLES PROVIDED OR WITH SELF TAPPING SCREWS (#12 AT EDGES, #10 AT FACE).

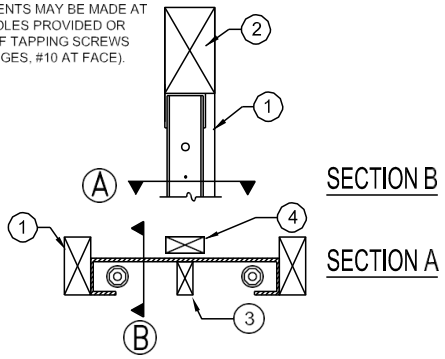

1. TRIMMERS PROVIDE FULL BEARING FOR HEADER ABOVE, DESIGN AND CONNECTIONS BY OTHERS.
2. 6x HEADER.
3. WOOD MEMBERS MAY BE INSERTED VERTICALLY OR HORIZONALLY IN CAVITY FOR BACKING AS NEEDED.

6x HEADER ABOVE–SECTION (3)

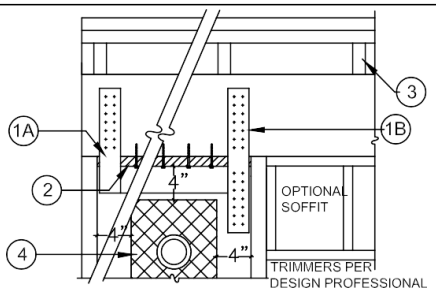

1A. WELDED STRAPS ARE AVAILABLE FROM MANUFACTURER WHEN REQUIRED BY THE DESIGN PROFESSIONAL.
1B. WHEN STRAPS ARE FIELD INSTALLED THE DESIGN AND CONNECTION IS BY THE DESIGN PROFESSIONAL. CONNECTION TO PANEL WITH SELF TAPPING SCREWS IS PERMITTED.
2. A 2x WOOD FILLER WITH 1/4"x4-1/2" (MIN.) USP "WS" SERIES SCREWS OR EQUAL IS PERMITTED.
3. WHEN CRIPPLE STUDS OCCUR, SHEAR TRANSFER DESIGN TO BE PER THE DESIGN PROFESSIONAL.
4A. THERE IS NO "INSIDE" OR "OUTSIDE" FACE OF PANEL. TO PREVENT THE NEED FOR ADDITIONAL HOLES ORIENT THE PANEL CAVITY TOWARD THE FIXTURE BEING INSTALLED.
4B. A 1" DIA. HOLE MAY BE ADDED IN THE PANEL FACE WHEN IT IS LOCATED IN THE UPPER HALF OF THE PANEL HEIGHT AND IS 4" MIN. FROM ANY EDGE. FOR PANELS MORE THAN 12" WIDE, ADDITIONAL HOLES MUST ALSO BE 1" MINIMUM FROM THE 3" DIA. HOLE PROVIDED.
4C. FOR HOLES LARGER THAN 1" DIA. OR TO ADD MORE THAN ONE HOLE CONTACT HARDY FRAMES, INC.

TOP CONNECTION TO HEADER (2)

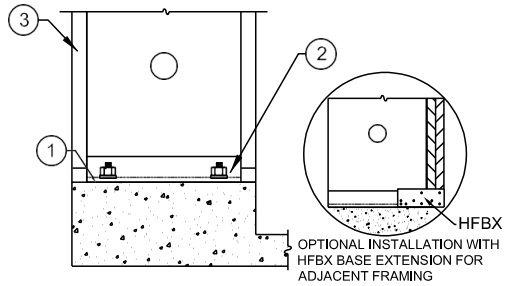

1. 15# FELT OR EQUIVALENT MOISTURE BARRIER RECOMMENDED BETWEEN PANEL BASE AND CONCRETE.
2. 1 EA. HARDENED ROUND, 2 EA. SAE OR 2 EA. ROUND-FLAT WASHERS AND 1 EA. GRADE 8 HEX NUT.
3. ADJACENT FRAMING OPTIONAL U.N.O. BY BUILDING DESIGN PROFESSIONAL.

INSTALLATION ON CURB (1)

HFX–SERIES 78 IN. THRU 13 FOOT

Model Number	Net Height (in)	Depth (in)	Hold Down Diameter[1] (in)	Top Screw Qty[2] (ea)	Screw Qty Available at Edges (ea)[3]
HFX-12x78 thru 24x78	78	3-1/2	1-1/8	HFX-9x = 5 HFX-12x = 6 HFX-15x = 8 HFX-18x =10 HFX-21x =12 HFX-24x =14	4
HFX-9x79.5	79-1/2				
HFX-12x8 thru 24x8	92-1/4				
HFX-9x8	93-3/4				
HFX-12x9 thru 24x9	104-1/4				
HFX-12x10 thru 24x10	116-1/4				5
HFX-15x11 thru 24x11	128-1/4				
HFX-15x12 thru 24x12	140-1/4				6
HFX-15x13 thru 24x13	152-1/4				

BALLOON PANELS

Model Number	Net Height (in)	Depth (in)	Hold Down Diameter[1] (in)	Top Screw Qty[2] (ea)	Screw Qty Available at Edges (ea)[3]
HFX-15x14 thru 24x14	164-1/4	3-1/2	1-1/8	HFX-15x = 8 HFX-18x =10 HFX-21x =12 HFX-24x =14	6
HFX-15x15 thru 24x15	176-1/4				
HFX-15x16 thru 24x16	188-1/4				
HFX-15x17 thru 24x17	200-1/4				7
HFX-15x18 thru 24x18	212-1/4				
HFX-15x19 thru 24x19	224-1/4				8
HFX-15x20 thru 24x20	236-1/4				

1) Hold down bolts connect to the Panel base with (1 ea) Hardened Round, (2 ea) Round-Flat or (2 ea) SAE Washers below (1 ea) Grade 8 Hex Nut on each rod or as specified by the Building Design Professional.
2) 1/4" diameter USP-WS Series screws (or equal). Length is 3" (minimum) when attached directly to the collector and 4-1/2" (minimum) when installing a 2x filler above the Panel.
3) Adjacent framing with 1/4" diameter screws is required at the edges when installing a 4x filler above or when specified by the Design Professional.

INSTALLATION INSTRUCTIONS

A) When installing directly on concrete, place Panel over bolts and connect with (1 ea) Hardened Round, (2 ea) Round-Flat or (2 ea) SAE Washers below (1 ea) Grade 8 or 2H Heavy Hex Nut. Secure with a deep socket (recommended) until "Snug Tight".
B) If bottom connection is not detailed on plans, confirm with Design Professional before installing on Nuts & Washers or on a Mudsill.
C) Use 1/4"x4-1/2" USP-WS Series screws (or equal) at top connections with a 2x filler. If the top of Panel is in direct contact with the collector above (top plates, header, beam, etc.) use1/4 x 3" (minimum)
D) For installations with a 4x filler above 1/4" diameter screws are required at the Panel edges to brace for the out-of-plane hinge or when they are specified by the Design Professional.

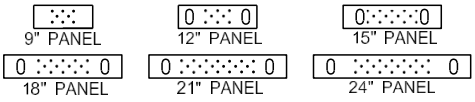

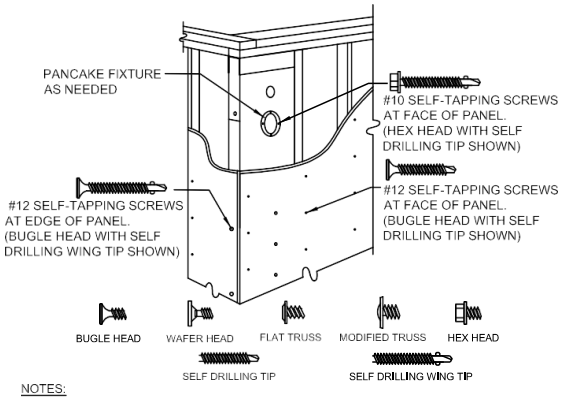

NOTES:
1) SURFACE FINISHES, CONNECTORS AND FIXTURES ARE ATTACHED TO THE PANEL FACE WITH # 10 SELF-TAPPING SCREWS SPACED NO LESS THAN 2-1/4" OC.
2) ATTACHMENTS TO THE PANEL EDGES ARE MADE WITH # 12 SELF-TAPPING SCREWS.
3) STRUCTURAL CONNECTIONS ARE TO BE DESIGNED BY THE DESIGN PROFESSIONAL.
4) STRUCTURAL HARDWARE USED TO TRANSFER LOADS SHOULD NOT EXCEED 12 GAGE.

FIGURE 2

ICC-ES® Most Widely Accepted and Trusted

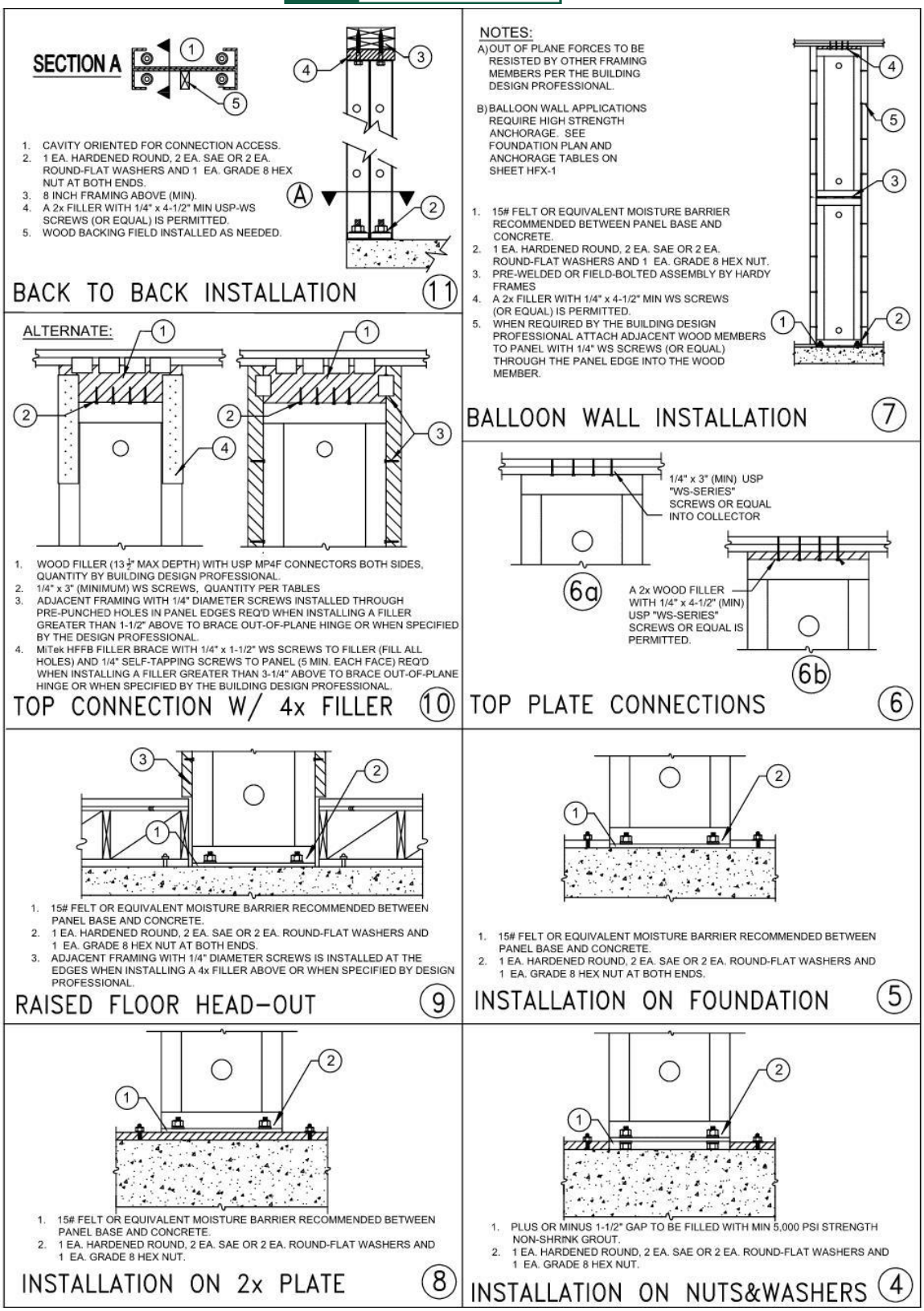

FIGURE 2 (Continued)

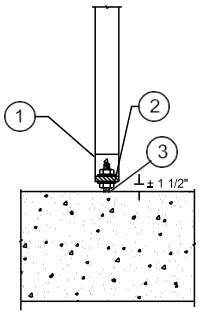

1. ACCESS HOLE LOCATED AT EDGE OF POST.
2. 1 EA. HARDENED ROUND, 2 EA. SAE OR 2 EA. ROUND-FLAT WASHERS AND 1 EA. GRADE 8 HEX NUT.
3. PLUS OR MINUS 1-1/2" GAP TO BE FILLED WITH MINIMUM 5,000 PSI STRENGTH NON-SHRUNK GROUT.

POST ON DBL. NUT (12)

Model Number	Net Height (in)	Depth (in)	Hold Down Diameter[1] (in)	Screw Quantity Panel	Screw Quantity Top[2] (ea)	Screw Quantity Bott[3] (ea)	Screw Qty[4] Available at Edges (ea)
HFX-12x8 thru 24x8	92-1/4	3-1/2	1-1/8	HFX-12x HFX-15x HFX-18x HFX-21x HFX-24x	6 8 10 12 14	6 8 10 12 14	4
HFX-12x9 thru 24x9	104-1/4						
HFX-12x10 thru 24x10	116-1/4						5
HFX-15x11 thru 24x11	128-1/4						
HFX-15x12 thru 24x12	140-1/4						6
HFX-15x13 thru 24x13	152-1/4						

NOTE: *HARDY FRAME*® "STK" WASHERS ARE REQUIRED IN THE TOP OF PANELS WHEN CONNECTING TO A HOLD DOWN ROD FROM ABOVE. *HARDY FRAME*® "STK PANELS" INCLUDE STK WASHERS PRE-WELDED IN THE TOP CHANNEL.

1) Hold down bolts specified as Standard Grade (STD) must comply with ASTM F1554 Grade 36 (or equal) Hold down bolts specified as High Strength (HS) must comply with ASTM A 193 Grade B7 (or equal). HD bolts (both grades) connect to the base of the Panel above with one Hardened Round, two Flat or two SAE Washers and a Grade 8 Hex Nut (or equal).
HD bolts (both grades) connect to the top channel of the Panel below with a ***Hardy Frame***® Stacking (STK) Washer (may be pre-welded in a ***Hardy Frame***® "STK" Panel), one Hardened Round, two Flat or two SAE Washers and a Grade 8 Hex Nut (or equal).
2) 1/4" diameter USP-WS Series screws (or equal). Length is 3" (minimum) when attaching directly to the collector and 4-1/2" (minimum) when installing a 2x filler above the Panel.
3) 1/4" diameter USP-WS Series screws (or equal). Length is 4-1/2" (minimum) through base of Panel and 3" (minimum) at ***Hardy Frame***® Bearing Plate (HFXBP).
4) 1/4" diameter screws are required at the edges when installing a 4x filler above or when specified by the Design Professional.

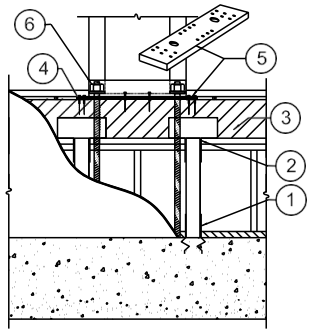

1) USP POST BASE BY THE DESIGN PROFESSIONAL
2) USP POST CAP BY THE DESIGN PROFESSIONAL
3) 4x (MIN) RIM AND STRUCTURAL FRAMING BY THE DESIGN PROFESSIONAL
4) FLOOR SHEATHING NOTCHED FOR BEARING PLATE.
5) ***HARDY FRAME***® BEARING PLATE (HFXBP) WITH 6 EA.1/4" DIA. x 3" (MIN) USP-WS SCREWS (OR EQUAL) AT EACH END. WHEN MORE THAN 12 EA. SCREWS ARE REQUIRED INSTALL 1/4" x 4-1/2" (MIN) SCREWS THROUGH BASE OF PANEL.
6) 1 EA. HARDENED ROUND, 2 EA. SAE OR 2 EA. ROUND-FLAT WASHERS AND 1 EA. GRADE 8 HEX NUT.

CRIPPLE WALL (13)

INSTALLATION ON FLOOR SYSTEMS WITH *HARDY FRAME*® BEARING PLATE (HFXBP)

A) Install a solid 4x (min) rim in floor system below Panel. Table values assume Engineered Wood Product (EWP).
B) Notch floor sheathing and screw ends of HFXBP to rim with 1/4x3" (min) USP "WS" Series Screws (or equal).
C) Install Panel on HFXBP, connect with threaded rod grade specified on plans and secure base of Panel with Hardened Round Washer and Grade 8 Nut (or equal). Nuts to be snug tight.
D) When stacking to a Panel below, "STK" Panels include "STK Washers" pre-welded in the top channel, or field install "STK" Washer, Hardened Round Washer and a Grade 8 Nut in the top channel of the Panel below.
E) When more than 12 screws are required for minimum bottom screw quantity, install 1/4x4-1/2" Screws through Panel base and HFXBP into rim.
F) For standard wall heights, install a 2x filler above Panel (Fig 2-Dtl 6a). For larger fillers see Fig 2-Dtl 10.

NOTE: Installations may vary with specific job conditions and/or specifications by the Design Professional.

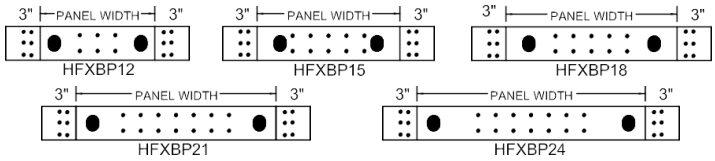

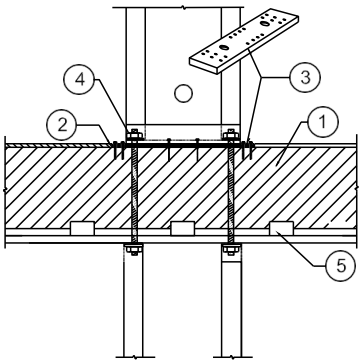

1. 4x (MIN) RIM. TABLES SPECIFY ENGINEERED WOOD PRODUCT.
2. FLOOR SHEATHING NOTCHED FOR BEARING PLATE.
3. ***HARDY FRAME***® BEARING PLATE (HFXBP) WITH 6 EA.1/4" DIA. x 3" (MIN) USP-WS SCREWS (OR EQUAL) AT EACH END. WHEN MORE THAN 12 EA. SCREWS ARE REQUIRED INSTALL 1/4" x 4-1/2" (MIN) SCREWS THROUGH BASE OF PANEL.
4. 1 EA. HARDENED ROUND, 2 EA. SAE OR 2 EA. ROUND-FLAT WASHERS AND 1 EA. GRADE 8 HEX NUT AT BOTH ENDS.
5. USP MP4 F CONNECTORS OR EQUAL BY BUILDING DESIGN PROFESSIONAL.

POSTS BELOW (14)

BUILDING DESIGN PROFESSIONAL TO DESIGN
A. LOAD PATH FROM BEAM TO FOUNDATION.
B. INSTALLATION WITHOUT *HARDY FRAME* BEARING PLATE (HFXBP) INCREASES PANEL DEFLECTION. BUILDING DESIGN PROFESSIONAL MUST ANALYZE EFFECTS.
C. BEAM DEFLECTION MAY INCREASE TOTAL DRIFT OF PANEL. BUILDING DESIGN PROFESSIONAL MUST ANALYZE EFFECTS.

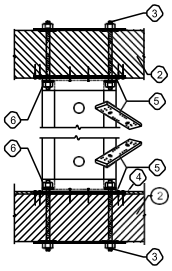

1. HFX PANEL WITH 3/4" PLATE BUILT INSIDE BOTTOM & TOP CHANNEL BY MANUFACTURER
2. WOOD BEAM PER PLAN.
3. ***HARDY FRAME*** BEARING PLATE (HFXBP) OR BEARING PLATE WASHER AT UNDERSIDE OF BEAM SIZED PER BUILDING DESIGN PROFESSIONAL TO LIMIT CRUSHING FROM TENSION AND ANCHOR FORCES.
4. FLOOR SHEATHING NOTCHED FOR BEARING PLATE AT EDGE OF BEAM NOT IN CONTACT WITH HFX PANEL.
5. ***HARDY FRAME*** BEARING PLATE (HFXBP) WITH 6 EA.1/4" DIA. x 3" (MIN) USP-WS SCREWS AT EACH END. WHEN MORE THAN 12 EA. SCREWS ARE REQUIRED INSTALL 1/4" x 4-1/2" (MIN) SCREWS THROUGH BASE OF PANEL.
6. 1 EA. HARDENED ROUND, 2 EA. SAE OR 2 EA. ROUND-FLAT WASHERS AND 1 EA. GRADE 8 HEX NUT.

PANEL-FIXED TOP&BOTTOM (15)

BUILDING DESIGN PROFESSIONAL TO DESIGN
A. LOAD PATH FROM BEAM TO FOUNDATION.
B. INSTALLATION WITHOUT *HARDY FRAME* BEARING PLATE (HFXBP) INCREASES PANEL DEFLECTION. BUILDING DESIGN PROFESSIONAL MUST ANALYZE EFFECTS.
C. THE BEAM DEFLECTION MAY INCREASE TOTAL DRIFT OF PANEL. BUILDING DESIGN PROFESSIONAL MUST ANALYZE EFFECTS.

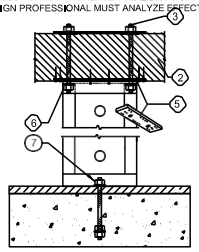

1. HFX PANEL WITH 3/4" PLATE BUILT INSIDE BOTTOM & TOP CHANNEL BY MANUFACTURER
2. WOOD BEAM PER PLAN.
3. ***HARDY FRAME*** BEARING PLATE (HFXBP) OR BEARING PLATE WASHER AT UNDERSIDE OF BEAM SIZED PER BUILDING DESIGN PROFESSIONAL TO LIMIT CRUSHING FROM TENSION AND ANCHOR FORCES.
4. FLOOR SHEATHING NOTCHED FOR BEARING PLATE AT EDGE OF BEAM NOT IN CONTACT WITH HFX PANEL.
5. ***HARDY FRAME*** BEARING PLATE (HFXBP) WITH 6 EA.1/4" DIA. x 3" (MIN) USP-WS SCREWS AT EACH END. WHEN MORE THAN 12 EA. SCREWS ARE REQUIRED INSTALL 1/4" x 4-1/2" (MIN) SCREWS THROUGH BASE OF PANEL.
6. 1 EA. HARDENED ROUND, 2 EA. SAE OR 2 EA. ROUND-FLAT WASHERS AND 1 EA. GRADE 8 HEX NUT.
7. 1-1/8" DIAMETER HOLD DOWN BOLT WITH 1 EA. GRADE 8 HEX NUT; 1/2" THICK x 3" x 3" PLATE WASHER & 2 NUTS BOLT GRADE PER PLANS.

PANEL FIXED TOP PINNED BOTTOM (16)

FIGURE 2 (Continued)

NOTE:
COUPLING NUTS MAY BE USED WHEN THREADED ROD IS SUBJECT TO TENSION LOADS ONLY.

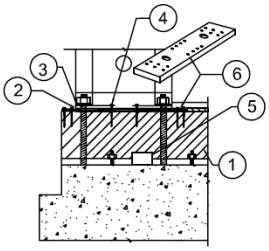

1. 4x (MIN) RIM, TABLES SPECIFY ENGINEERED WOOD PRODUCT.
2. FLOOR SHEATHING NOTCHED FOR BEARING PLATE (HFXBP).
3. 1 EA. HARDENED ROUND, 2 EA. SAE OR 2 EA. ROUND-FLAT WASHERS AND 1 EA. GRADE 8 HEX NUT.
4. 1/4" x 4 1/2 (MIN) USP-WS SCREWS (OR EQUAL) THROUGH BOTTOM OF PANEL MIN QUANTITY PER TABLE.
5. USP MP4 F CONNECTORS OR EQUAL BY BUILDING DESIGN PROFESSIONAL.
6. ***HARDY FRAME*** BEARING PLATE (HFXBP) WITH 6 EA.1/4" DIA. x 3" (MIN) USP-WS SCREWS (OR EQUAL) AT EACH END. WHEN MORE THAN 12 EA. SCREWS ARE REQUIRED INSTALL 1/4" x 4-1/2" (MIN) SCREWS THROUGH BASE OF PANEL.

RAISED-OS CORNER (25)

NOTE: COUPLING NUTS MAY BE USED WHEN THREADED ROD IS SUBJECT TO TENSION LOADS ONLY.

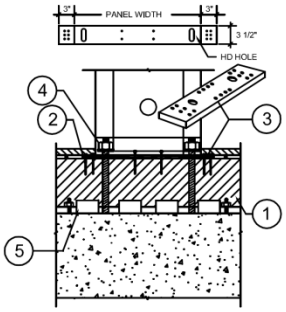

1. 4x (MIN) RIM, TABLES SPECIFY ENGINEERED WOOD PRODUCT.
2. FLOOR SHEATHING NOTCHED FOR BEARING PLATE (HFXBP).
3. ***HARDY FRAME*** ®BEARING PLATE (HFXBP) WITH 6 EA.1/4" DIA. x 3" (MIN) USP-WS SCREWS (OR EQUAL) AT EACH END. WHEN MORE THAN 12 EA. SCREWS ARE REQUIRED INSTALL 1/4" x 4-1/2" (MIN) SCREWS THROUGH BASE OF PANEL.
4. 1 EA. HARDENED ROUND, 2 EA. SAE OR 2 EA. ROUND-FLAT WASHERS AND 1 EA. GRADE 8 HEX NUT.
5. USP MP4 F CONNECTORS OR EQUAL BY BUILDING DESIGN PROFESSIONAL.

RAISED-BEARING PL (22)

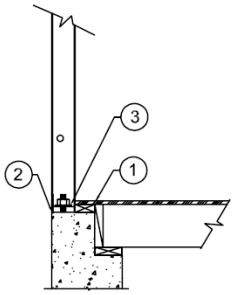

1. FLOOR SHEATHING AND MUDSILL NOTCHED, PANEL INSTALLS ON CONCRETE.
2. 15# FELT OR EQUIVALENT MOISTURE BARRIER RECOMMENDED BETWEEN PANEL BASE AND CONCRETE.
3. 1 EA. HARDENED ROUND, 2 EA. SAE OR 2 EA. ROUND-FLAT WASHERS AND 1 EA. GRADE 8 HEX NUT.

RAISED STEM WALL (19)

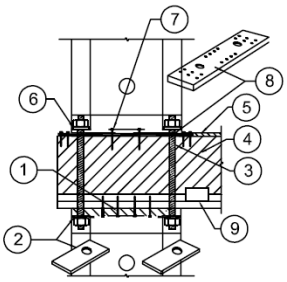

1. 1/4" x 4-1/2" (MIN) USP-WS SCREWS (OR EQUAL) PER TABLE.
2. ***HARDY FRAME*** ®"STK WASHER" AT TOP OF PANEL WHEN CONNECTING TO HOLD DOWN ABOVE.
3. ALL THREAD ROD PER PLANS.
4. 4x (MIN) RIM, TABLES SPECIFY ENGINEERED WOOD PRODUCT.
5. FLOOR SHEATHING NOTCHED INSTALL PANEL DIRECTLY ON RIM.
6. 1 EA. HARDENED ROUND, 2 EA. SAE OR 2 EA. ROUND-FLAT WASHERS AND 1 EA. GRADE 8 HEX NUT AT BOTH ENDS.
7. 1/4" x 4 1/2 (MIN) USP-WS SCREWS (OR EQUAL) THROUGH BOTTOM OF PANEL MIN QUANTITY PER TABLE.
8. ***HARDY FRAME*** BEARING PLATE (HFXBP) WITH 6 EA.1/4" DIA. x 3" (MIN) USP-WS SCREWS (OR EQUAL) AT EACH END. WHEN MORE THAN 12 EA. SCREWS ARE REQUIRED INSTALL 1/4" x 4-1/2" (MIN) SCREWS THROUGH BASE OF PANEL.
9. USP MP4 F CONNECTORS OR EQUAL BY BUILDING DESIGN PROFESSIONAL.

STACK @ OS CORNER (21)

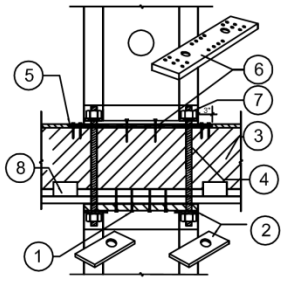

1. 1/4" x 4-1/2" (MIN) USP-WS SCREWS (OR EQUAL) PER TABLE.
2. ***HARDY FRAME*** ®"STK WASHER" AT TOP OF PANEL WHEN CONNECTING TO HOLD DOWN ABOVE.
3. 4x (MIN) RIM, TABLES SPECIFY ENGINEERED WOOD PRODUCT.
4. ALL THREAD ROD PER PLANS.
5. FLOOR SHEATHING NOTCHED FOR BEARING PLATE (HFXBP).
6. ***HARDY FRAME*** ®BEARING PLATE (HFXBP) WITH 6 EA.1/4" DIA. x 3" (MIN) USP-WS SCREWS (OR EQUAL) AT EACH END. WHEN MORE THAN 12 EA. SCREWS ARE REQUIRED INSTALL 1/4" x 4-1/2" (MIN) SCREWS THROUGH BASE OF PANEL.
7. 1 EA. HARDENED ROUND, 2 EA. SAE OR 2 EA. ROUND-FLAT WASHERS AND 1 EA. GRADE 8 HEX NUT.
8. USP MP4 F CONNECTORS OR EQUAL BY BUILDING DESIGN PROFESSIONAL.

STRAIGHT STACK (18)

BUILDING DESIGN PROFESSIONAL TO DESIGN
A. LOAD PATH FROM BEAM TO FOUNDATION.
B. BEAM DEFLECTION MAY INCREASE TOTAL DRIFT OF PANEL. BUILDING DESIGN PROFESSIONAL MUST ANALYZE EFFECTS.

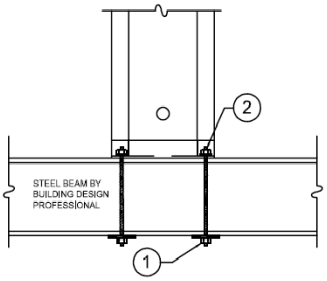

1. ALL THREAD HOLD DOWN WITH WASHER AS DETERMINED BY THE BUILDING DESIGN PROFESSIONAL AT UNDERSIDE OF BEAM PER PLAN.
2. 1 EA. HARDENED ROUND, 2 EA. SAE OR 2 EA. ROUND-FLAT WASHERS AND 1 EA. GRADE 8 HEX NUT.

STEEL BM THRU BOLT (20)

BUILDING DESIGN PROFESSIONAL TO DESIGN
A. LOAD PATH FROM BEAM TO FOUNDATION.
B. INSTALLATION WITHOUT *HARDY FRAME*® BEARING PLATE (HFXBP) INCREASES PANEL DEFLECTION AND MAY RESULT IN A DECREASE OF ALLOWABLE SHEAR VALUES. BUILDING DESIGN PROFESSIONAL MUST ANALYZE EFFECTS.
C. BEAM DEFLECTION MAY INCREASE TOTAL DRIFT OF PANEL. BUILDING DESIGN PROFESSIONAL MUST ANALYZE EFFECTS.

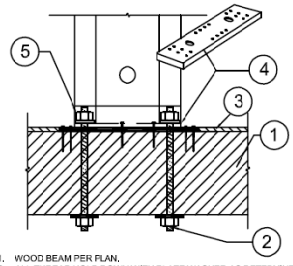

1. WOOD BEAM PER PLAN.
2. ALL THREAD HOLD DOWN WITH PLATE WASHER AS DETERMINED BY THE BUILDING DESIGN PROFESSIONAL AT UNDERSIDE OF BEAM PER PLAN.
3. FLOOR SHEATHING NOTCHED FOR BEARING PLATE.
4. ***HARDY FRAME*** ®BEARING PLATE (HFXBP) WITH 6 EA.1/4" DIA. x 3" (MIN) USP-WS SCREWS (OR EQUAL) AT EACH END. WHEN MORE THAN 12 EA. SCREWS ARE REQUIRED INSTALL 1/4" x 4-1/2" (MIN) SCREWS THROUGH BASE OF PANEL.
5. 1 EA. HARDENED ROUND, 2 EA. SAE OR 2 EA. ROUND-FLAT WASHERS AND 1 EA. GRADE 8 HEX NUT.

WOOD BM THRU BOLT (17)

FIGURE 2 (Continued)

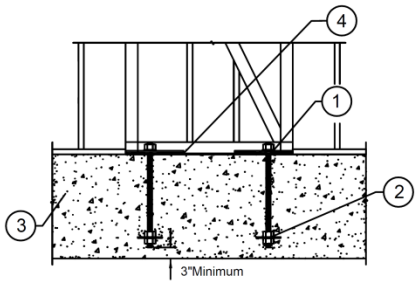

1. HARDENED ROUND, (2) SAE OR (2) ROUND-FLAT WASHERS AND GRADE 8 HEX NUT
2. 7/8" DIAMETER HOLD DOWN BOLT WITH 1/2" THICK x 3" x 3" PLATE WASHER & 2 NUTS AT EMBED END PER PLAN
3. FOUNDATION DESIGN BY BUILDING DESIGN PROFESSIONAL
4. MOISTURE BARRIER RECOMMENDED (USE 15# FELT, OR EQ.)

INSTALL ON FOUNDATION (29)

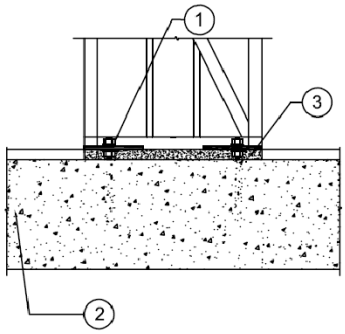

1. HARDENED ROUND, (2) SAE OR (2) ROUND-FLAT WASHERS AND GRADE 8 HEX NUTS ABOVE AND BELOW BASE
2. FOUNDATION DESIGN BY BUILDING DESIGN PROFESSIONAL
3. PLUS OR MINUS 1-1/2" GAP TO BE FILLED WITH MINIMUM 5,000 PSI STRENGTH NON-SHRINK GROUT

INSTALL ON NUT&WASHER (27)

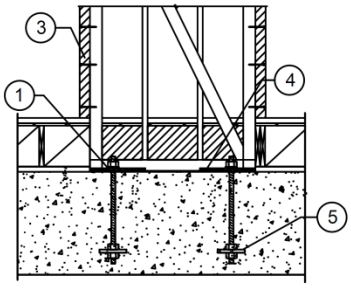

1. HARDENED ROUND, (2) SAE OR (2) ROUND-FLAT WASHERS AND GRADE 8 HEX NUT.
2. FOUNDATION DESIGN BY THE DESIGN PROFESSIONAL
3. ADJACENT FRAMING FOR RESISTING OUT OF PLANE LOADS BY BUILDING DESIGN PROFESSIONAL
4. MOISTURE BARRIER RECOMMENDED (USE 15# FELT, OR EQUIVALENT)
5. 7/8" DIAMETER HOLD DOWN BOLT WITH 1/2" THICK x 3" x 3" PLATE WASHER & 2-NUTS AT EMBED END PER PLAN.

RAISED FL. HEAD-OUT (26)

FIGURE 2 (Continued)

NOTE: COUPLING NUTS MAY BE USED WHEN THREADED ROD IS SUBJECT TO TENSION LOADS ONLY.

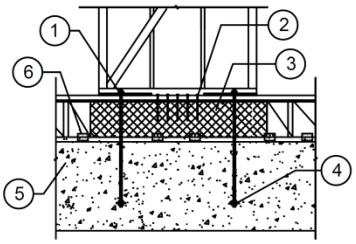

1. HARDENED ROUND (2) SAE OR (2) FOUND-FLAT WASHERS AND GRADE 8 HEX NUT
2. 1/4" DIAMETER (MINIMUM) x 4 1/2" LONG USP-WS SCREWS (OR EQUAL) PER TABLES
3. 4x MINIMUM RIM, TABLES SPECIFY ENGINEERED WOOD PRODUCT
4. 7/8" DIAMETER HOLD DOWN BOLT WITH 1/2" x 3"x 3" PLATE WASHER & 2-NUTS AT EMBED END PER PLAN
5. FOUNDATION DESIGN BY THE DESIGN PROFESSIONAL
6. USP MP4F CONNECTORS OR EQUAL BY THE DESIGN PROFESSIONAL

RAISED FLOOR 33

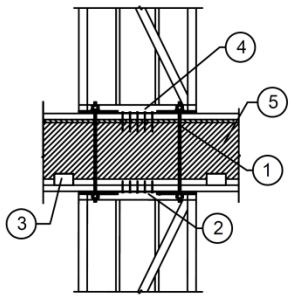

1. 7/8" DIAMETER ROD WITH HARDENED ROUND, (2) SAE OR (2) ROUND-FLAT WASHERS AND GRADE 8 HEX NUTS AT BOTH ENDS
2. 1/4" DIAMETER (MINIMUM) x 3" LONG USP-WS SCREWS (OR EQUAL) PER TABLE
3. USP MP4F CONNECTIONS OR EQUAL BY BUILDING DESIGN PROFESSIONAL
4. 1/4" DIAMETER (MIN.) x 4-1/2" LONG USP-WS SCREWS (OR EQUAL) PER TABLES
5. 4x MINIMUM RIM, TABLES SPECIFY ENGINEERED WOOD PRODUCT

STRAIGHT STACK 31

BUILDING DESIGN PROFESSIONAL TO DESIGN
A. LOAD PATH FROM BEAM TO FOUNDATION.
B. BEAM DEFLECTION MAY INCREASE TOTAL DRIFT OF BRACE FRAME. BUILDING DESIGN PROFESSIONAL MUST ANALYZE EFFECTS.

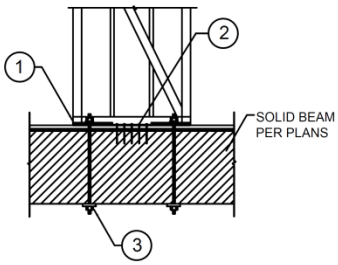

1. 3/4" THICK STEEL PLATE WASHER BUILT INTO BOTTOM OF BRACE FRAME (BY MANUFACTURER)
2. 1/4" DIAMETER (MIN.) x 4-1/2" LONG USP-WS SCREWS (OR EQUAL) PER TABLES
3. THREADED ROD HOLD DOWN WITH PLATE WASHER AS DETERMINED BY THE BUILDING DESIGN PROFESSIONAL AT UNDERSIDE OF BEAM PER PLANS

WOOD BM THRU BOLT 32

BUILDING DESIGN PROFESSIONAL TO DESIGN
A. LOAD PATH FROM BEAM TO FOUNDATION.
B. BEAM DEFLECTION MAY INCREASE TOTAL DRIFT OF PANEL. BUILDING DESIGN PROFESSIONAL MUST ANALYZE EFFECTS.

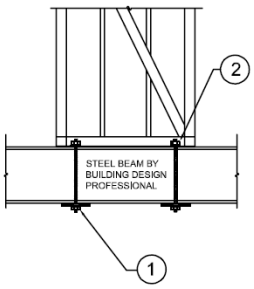

1. ALL THREAD HOLD DOWN WITH WASHER AS DETERMINED BY THE BUILDING DESIGN PROFESSIONAL AT UNDERSIDE OF BEAM PER PLAN.
2. 1 EA. HARDENED ROUND, 2 EA. SAE OR 2 EA. ROUND-FLAT WASHERS AND 1 EA. GRADE 8 HEX NUT.

STEEL BM THRU BOLT 30

FIGURE 2 (Continued)

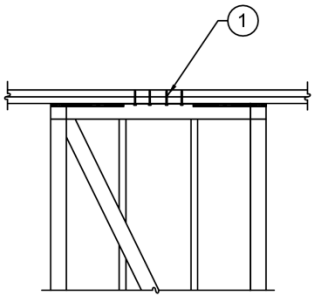

1. 1/4" DIAMETER (MINIMUM) x 3" LONG USP-WS SCREWS (OR EQUAL) PER TABLE

TOP PLATE 37

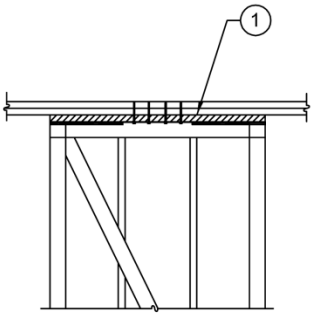

1. 2x WOOD FILLER CONNECTION WITH 1/4" DIAMETER (MINIMUM) x 4 1/2" LONG USP-WS SCREWS OR EQUAL

2x FILLER 35

FOR FILLERS LARGER THAN 1 1/2", ENGINEER OF RECORD TO DESIGN:
A. STUDS OR STRAPS TO TRANSFER UPLIFT OF FILLER MATERIAL
B. ADDITIONAL DRIFT DUE TO THE ADDITIONAL FILLER HEIGHT
C. STUDS/POST AT EACH END OF BRACE FRAME FOR OUT OF PLANE LOAD
D. IF SPLICE OCCURS AT TOP PLATES, FASTENING MUST DEVELOP TENSILE STRENGTH IN LUMBER

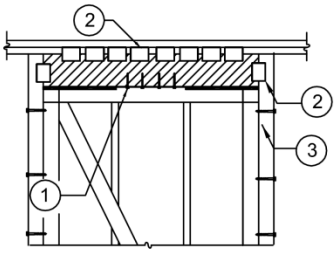

1. 4x WOOD FILLER CONNECTION WITH 1/4" DIAMETER x 3" LONG (MINIMUM) USP-WS SCREWS OR EQUAL PER TABLE
2. USP MP4F CONNECTORS OR EQUAL BY BUILDING DESIGN PROFESSIONAL
3. ADJACENT FRAMING FOR RESISTING OUT OF PLANE LOADS BY BUILDING DESIGN PROFESSIONAL

4x FILLER 36

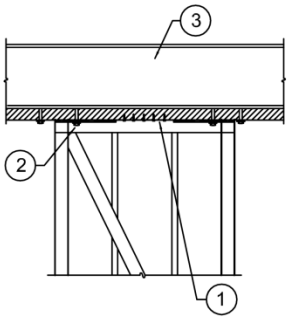

1. 1/4" DIAMETER (MINIMUM) USP-WS SCREWS (OR EQUAL) FOR SHEAR TRANSFER FROM WOOD TO HARDY FRAME® BRACE FRAME
2. CONNECTION BY BUILDING DESIGN PROFESSIONAL
3. STEEL BEAM PER PLANS

STEEL BEAM W/ NAILER 34

FIGURE 2 (Continued)

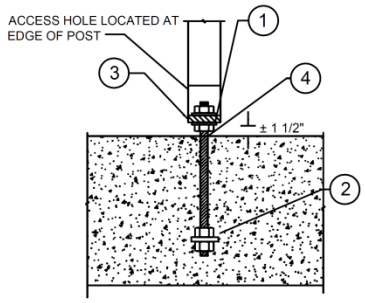

1. HARDENED ROUND, (2) SAE OR (2) ROUND-FLAT WASHERS AND GRADE 8 HEX NUTS ABOVE AND BELOW BASE
2. THREADED ROD HOLD DOWN BOLT WITH 1/2" THICK x 3" x 3" PLATE WASHER & NUT. Hardy Frame BOLT BRACE (HFXBB) MAY REPLACE PLATE WASHERS WHEN ASTM F1554 GR36 THREADED ROD IS SPECIFIED
3. 3/4" THICK PLATE WASHER BUILT IN POST BY MANUFACTURER
4. PLUS OR MINUS 1-1/2" GAP TO BE FILLED WITH MINIMUM 5,000 PSI STRENGTH NON-SHRINK GROUT

POST ON DBL. NUT (41)

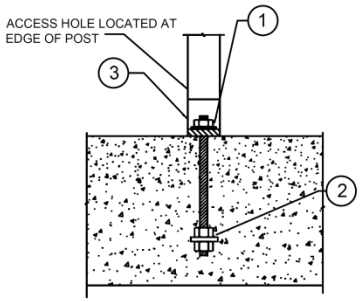

1. HARDENED ROUND, (2) SAE OR (2) ROUND-FLAT WASHERS AND GRADE 8 HEX NUT
2. THREADED ROD HOLD DOWN BOLT WITH 1/2" THICK x 3" x 3" PLATE WASHER & NUT. Hardy Frame BOLT BRACE (HFXBB) MAY REPLACE PLATE WASHERS WHEN ASTM F1554 GR36 THREADED ROD IS SPECIFIED
3. 3/4" THICK PLATE WASHER BUILT IN POST BY MANUFACTURER

POST ON CONCRETE (39)

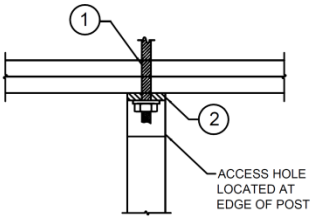

1. THREADED ROD WITH HARDENED ROUND, (2) SAE OR (2) ROUND-FLAT WASHERS AND GRADE 8 HEX NUT CONNECTING TO HOLD DOWN ABOVE
2. 3/4" THICK PLATEWASHER BUILT IN BY MANUFACTURER

POST TO TOP PLATES (40)

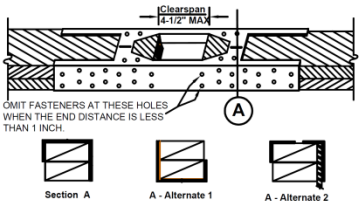

Section A : HFS Installed over Double Top Plates
A - Alternate 1 : HFS Installed to Underside of Double Top Plates
A - Alternate 2 : HFS Separated into Two "L" Shapes to allow for Installation over Wood Structural Panel Sheeting or for Installation at 2x6 and Greater Wall Depths.

Table 8.1 : Hardy Frame ® Saddle

Model Number	Fastener Qty	ASD Tension (lbs)	ASD Compression (lbs)
HFS24	24 - 16d common	2950	2500
HFS36	32 - 16d common	4280	2500

Notes:
1) Maximum Clearspan splice is 4-1/2"
2) Fastener quantity is the number of 16d common nails to be installed at each end of the splice.
3) When the distance from the splice to the first nail hole is less than 1 inch, omit the (2) nails in the 3 inch sideplate and the (1) nail in the 1-1/2 inch sideplate closest to the splice.
4) For the HFS24 that is installed with 22 - 16d common nails on each end of the splice (44 total) there is no reduction in the values.
5) For the HFS36 that is installed with 31 - 16d common nails on each end of the splice (62 total) there is no reduction in the values.
6) Allowable tension capacity is based on attachment to lumber with a minimum specific gravity of 0.49.
7) Loads shown are allowable stress design (ASD) and exclude a 1.33 stress increase.

HARDY FRAME SADDLE (38)

FIGURE 2 (Continued)

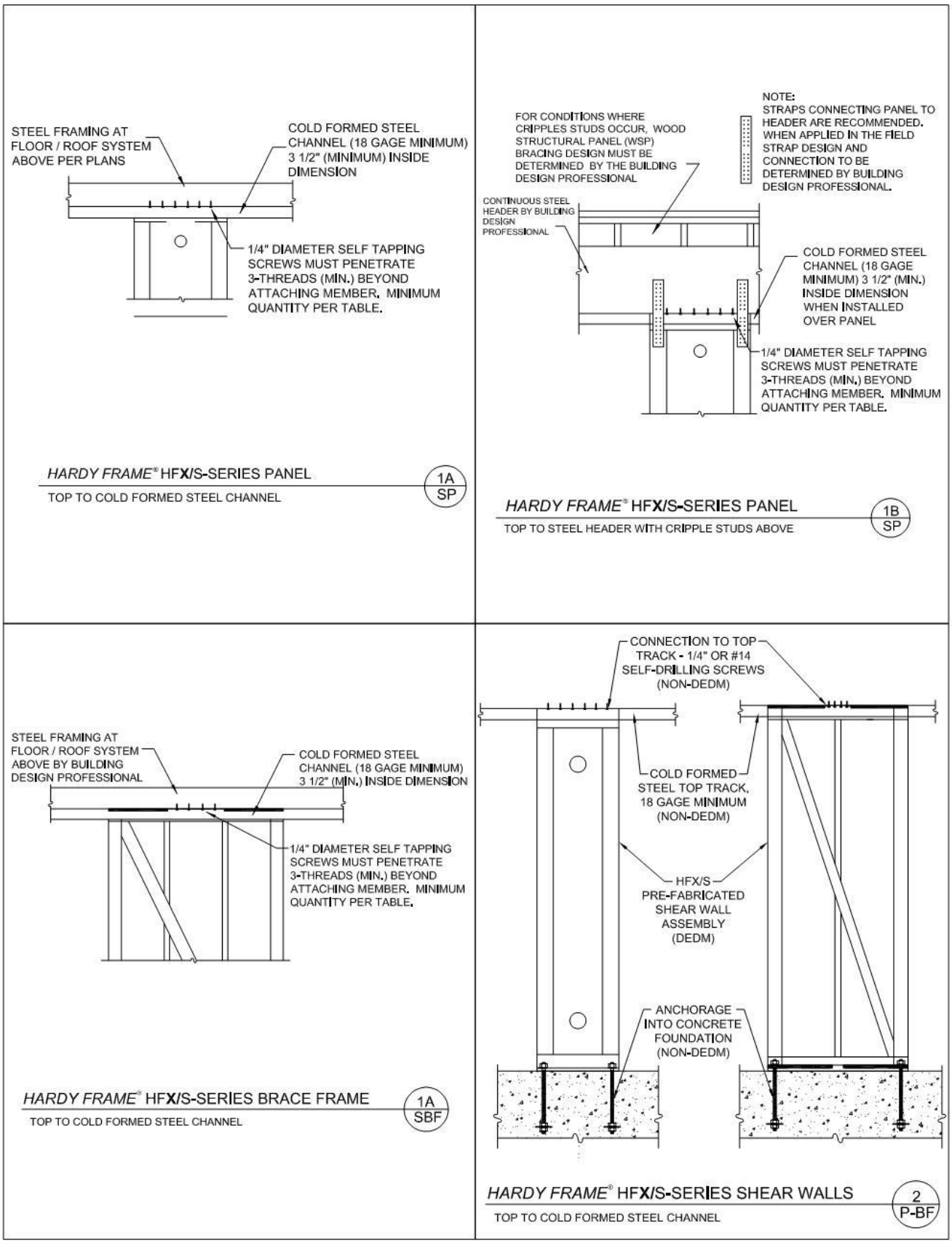
STEEL FRAMING AT FLOOR / ROOF SYSTEM ABOVE PER PLANS
COLD FORMED STEEL CHANNEL (18 GAGE MINIMUM) 3 1/2" (MINIMUM) INSIDE DIMENSION
1/4" DIAMETER SELF TAPPING SCREWS MUST PENETRATE 3-THREADS (MIN.) BEYOND ATTACHING MEMBER. MINIMUM QUANTITY PER TABLE.
HARDY FRAME® HFX/S-SERIES PANEL
TOP TO COLD FORMED STEEL CHANNEL
1A SP
NOTE: STRAPS CONNECTING PANEL TO HEADER ARE RECOMMENDED. WHEN APPLIED IN THE FIELD STRAP DESIGN AND CONNECTION TO BE DETERMINED BY BUILDING DESIGN PROFESSIONAL.
FOR CONDITIONS WHERE CRIPPLES STUDS OCCUR, WOOD STRUCTURAL PANEL (WSP) BRACING DESIGN MUST BE DETERMINED BY THE BUILDING DESIGN PROFESSIONAL
CONTINUOUS STEEL HEADER BY BUILDING DESIGN PROFESSIONAL
COLD FORMED STEEL CHANNEL (18 GAGE MINIMUM) 3 1/2" (MIN.) INSIDE DIMENSION WHEN INSTALLED OVER PANEL
1/4" DIAMETER SELF TAPPING SCREWS MUST PENETRATE 3-THREADS (MIN.) BEYOND ATTACHING MEMBER. MINIMUM QUANTITY PER TABLE.
HARDY FRAME® HFX/S-SERIES PANEL
TOP TO STEEL HEADER WITH CRIPPLE STUDS ABOVE
1B SP
STEEL FRAMING AT FLOOR / ROOF SYSTEM ABOVE BY BUILDING DESIGN PROFESSIONAL
COLD FORMED STEEL CHANNEL (18 GAGE MINIMUM) 3 1/2" (MIN.) INSIDE DIMENSION
1/4" DIAMETER SELF TAPPING SCREWS MUST PENETRATE 3-THREADS (MIN.) BEYOND ATTACHING MEMBER. MINIMUM QUANTITY PER TABLE.
HARDY FRAME® HFX/S-SERIES BRACE FRAME
TOP TO COLD FORMED STEEL CHANNEL
1A SBF
CONNECTION TO TOP TRACK - 1/4" OR #14 SELF-DRILLING SCREWS (NON-DEDM)
COLD FORMED STEEL TOP TRACK, 18 GAGE MINIMUM (NON-DEDM)
HFX/S PRE-FABRICATED SHEAR WALL ASSEMBLY (DEDM)
ANCHORAGE INTO CONCRETE FOUNDATION (NON-DEDM)
HARDY FRAME® HFX/S-SERIES SHEAR WALLS
TOP TO COLD FORMED STEEL CHANNEL
2 P-BF

FIGURE 3

ICC-ES® Most Widely Accepted and Trusted

FIGURE 4--1A-FDN *Hardy Frame*® HFX-Series UNREINFORCED ANCHORAGE[1,29, 10]

Model Number	Concrete Compressive Strength (psi)	HD Anchor[3]	Seismic[6]		Wind[7]		Shear Tie[8] Qty & Size
			Cracked l_e / C_{a1}&C_{a2}[4,5] (inches)	Uncracked l_e / C_{a1}&C_{a2}[4,5] (inches)	Cracked l_e / C_{a1}&C_{a2}[4,5] (inches)	Uncracked l_e / C_{a1}&C_{a2}[4,5] (inches)	
HFX-9x	2500	1-1/8" STD	13-19	12-17	9-13	8-11	1-#3
	3000	1-1/8" STD	12-18	11-16	10-14	8-12	
	4000	1-1/8" STD	12-17	10-14	9-13	8-11	
HFX-12x	2500	1-1/8" STD	13-19	12-17	10-15	10-14	1-#3
		1-1/8" HS	20-30	18-26	10-15	10-14	
	3000	1-1/8" STD	12-18	11-16	11-16	10-14	
		1-1/8" HS	19-28	17-25	12-17	10-15	
	4000	1-1/8" STD	12-17	10-14	10-14	9-13	
		1-1/8" HS	18-26	16-23	12-18	11-16	
HFX-15x78 thru 15x13	2500	1-1/8" STD	13-19	12-17	12-17	12-17	1-#3
		1-1/8" HS	20-30	18-26	14-21	13-19	
	3000	1-1/8" STD	12-18	11-16	12-17	12-17	
		1-1/8" HS	19-28	17-25	15-22	14-20	
	4000	1-1/8" STD	12-17	10-14	11-16	11-16	
		1-1/8" HS	18-26	16-23	14-21	13-19	
HFX-15x14 thru 15x20	2500	1-1/8" HS	20-30	18-26	12-17	10-15	
	3000		19-28	17-25	12-17	10-15	
	4000		18-26	16-23	10-14	9-13	
HFX-18x78 thru 18x13	2500	1-1/8" STD	13-19	12-17	14-20	14-20	1-#3
		1-1/8" HS	20-30	18-26	17-25	15-22	
	3000	1-1/8" STD	12-18	11-16	12-18	12-18	
		1-1/8" HS	19-28	17-25	15-22	14-20	
	4000	1-1/8" STD	12-17	10-14	12-17	12-17	
		1-1/8" HS	18-26	16-23	13-19	12-17	
HFX-18x14 thru 18x20	2500	1-1/8" HS	20-30	18-26	13-19	12-17	
	3000		19-28	17-25	12-17	11-16	
	4000		18-26	16-23	10-14	10-14	
HFX-21x78 thru 21x13	2500	1-1/8" STD	14-20	13-19	13-19	13-19	1-#3
		1-1/8" HS	20-30	18-27	22-33	22-33	2-#3
	3000	1-1/8" STD	13-19	12-18	12-18	12-18	1-#3
		1-1/8" HS	19-28	17-25	21-31	21-31	2-#3
	4000	1-1/8" STD	12-17	10-14	11-16	11-16	1-#3
		1-1/8" HS	18-26	16-23	17-25	17-25	2-#3
HFX-21x14 thru 21x20	2500	1-1/8" HS	20-30	18-26	16-23	14-21	2-#3
	3000		19-28	17-25	15-22	14-20	
	4000		18-26	16-23	13-19	12-17	
HFX-24x78 thru 24x13	2500	1-1/8" STD	13-19	12-17	13-19	13-19	1-#3
		1-1/8" HS	20-30	18-26	22-32	22-32	2-#3
	3000	1-1/8" STD	12-18	11-16	12-18	12-18	1-#3
		1-1/8" HS	19-28	17-25	23-34	23-34	2-#3
	4000	1-1/8" STD	12-17	10-14	11-16	11-16	1-#3
		1-1/8" HS	18-26	16-23	18-26	18-26	2-#3
HFX-24x14 thru 24x20	2500	1-1/8" HS	20-30	18-26	15-22	14-20	2-#3
	3000		19-28	17-25	14-20	12-18	
	4000		18-26	16-23	12-17	11-16	
HFX-32x	2500	7/8" STD	10-14	8-12	9-13	8-11	1-#3
		7/8" HS	15-22	13-19	9-13	8-12	
	3000	7/8" STD	10-14	8-12	8-12	8-11	
		7/8" HS	14-21	12-18	10-14	9-13	
	4000	7/8" STD	8-12	8-11	8-11	7-10	
		7/8" HS	13-19	12-17	10-15	10-14	
HFX-44x	2500	7/8" STD	10-14	8-12	9-13	8-12	1-#3
		7/8" HS	15-22	13-19	10-15	10-14	2-#3
	3000	7/8" STD	10-14	8-12	8-12	8-11	1-#3
		7/8" HS	14-21	12-18	11-16	10-14	2-#3
	4000	7/8" STD	8-12	8-11	8-11	7-10	1-#3
		7/8" HS	13-19	12-17	12-17	11-16	2-#3

For **SI**: 1 inch = 25.4 mm, 1 foot = 304.8 mm, 1 lb = 4.45 N, 1 psi = 6.89 kPa.

Notes:

1) Anchorage design complies with ACI 318-19 Chapter 17 for the 2024 and 2021 IBC, ACI 318-14 Chapter 17 for the 2018 and 2015 IBC (ACI 318-11 Appendix D, for the 2012 IBC) Condition B for cracked and uncracked normal weight concrete with no supplemental reinforcement with the tabulated minimum specified compressive strength. Cracked concrete occurs where analysis indicates cracking ($f_t > f_r$) at service load levels.

2) In Seismic Design Categories (SDC) A and B and for detached 1 and 2 family dwellings in SDC A, B, and C, wind values apply.

3) STD indicates steel anchor bolts complying with ASTM F1554 Grade 36. HS indicates steel anchor rods complying with a high strength steel specification as set forth in Section 3.8.4 of this Report.

4) l_e (first number in inches) is the embedment depth into a foundation that provides the minimum edge and end distance requirements C_{a1} and C_{a2} (second number in inches).

5) C_{a1} is the minimum end distance and C_{a2} is the minimum edge distance to the centerline of the Hold down Anchor.

6) The embedment depth, edge and end distances specified in this table for each combination of product model number, concrete strength and anchor grade/size apply to the corresponding tabulated allowable in-plane lateral shear values in Table 1.1A of this report and the corresponding tabulated uplift load values in Table 1.1A (including uplift loads calculated in accordance with Figure 5), and considers the interaction of tension and shear.

7) The anchor embedment depth, edge and end distances specified in this table apply to the allowable in-plane lateral shear values and the corresponding uplift load values tabulated in Table 1.1A of this report for each corresponding combination of product model number, concrete strength and anchor grade/size, and considers the interaction of tension and shear. When axial compressive load and in-plane lateral shear load are applied concurrently to Hardy Frame Panels, the building design professional must calculate uplift load per Figure 5 and confirm that the anchor bolt-to-concrete connection details in Figure 4 comply with the code provisions in Section 4.1.5 of this report.

8) Shear Ties are Grade 60 (min) rebar and are required at curbs and stem walls for near edge distance conditions. At unreinforced anchorage Shear Ties are not required for Panels installed on wood, IRC Braced Wall Panel applications, or when edge distance requirements in the Shear Tie table are met.

9) Foundation dimensions consider anchorage only. The Building Design Professional is responsible for the foundation design and is permitted to design and detail alternative anchorage.

10) Concrete Edge Distances must comply with ACI 318-19 Section 17.9.2 for the 2024 and 2021 IBC, ACI 318-14 Section 17.7.2 for the 2018 and 2015 IBC (ACI 318-11 Section D8.2 for the 2012 IBC).

FIGURE 4 (Continued)—SUPPLEMENTAL SHEAR TIE REINFORCEMENT

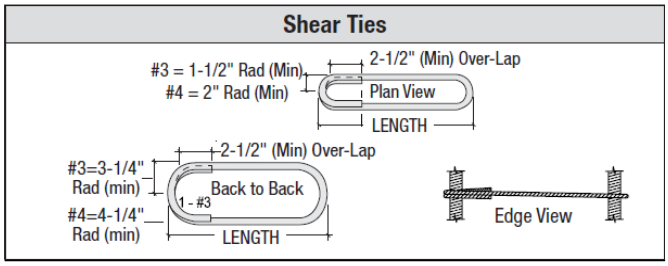

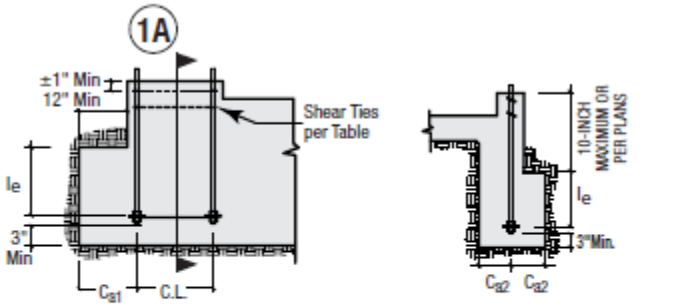

1 CURB @ OUTSIDE CORNER

1A CURB (6" MIN)

Shear reinforcement per ACI-318
Additional Reinforcement
May Be Required by EOR

Model	CL. Dist. (in)	Shear Tie Length (in)	@ Unreinforced Anchorage Min Distance Required To Omit Shear Ties	
			Edge (in)	End (in)
HFX-9x	5-1/2	7-1/2	2-3/8	2-3/8
HFX-12x	8-1/2	10-1/2	3-1/2	6-1/4
HFX-15x	9-3/4	12	4-1/4	7-3/8
HFX-18x	12-3/4	15	5	8-3/8
HFX-21x	15-3/4	18	5-1/2	9-3/8
HFX-24x	18-3/4	21	6	10-3/8

1) SUPPLEMENTAL SHEAR REINFORCEMENT REQUIREMENT IN ACCORDANCE WITH ACI 318 f'_c = 2500 psi. OTHER CONCRETE STRENGTH DETAILS MUST BE PREPARED BY A REGISTERED DESIGN PROFESSIONAL
2) APPLICABLE FOR BOTH WIND AND SEISMIC DESIGN
3) SHEAR REINFORCEMENT IS NOT REQUIRED AT PANELS AND BRACE FRAMES SUPPORTED ON WOOD FRAMING OR LOCATED AWAY FROM FOUNDATION EDGES (INTERIOR FOUNDATION)
4) SUPPLEMENTAL SHEAR REINFORCEMENT IS NOT REQUIRED FOR BRACED WALL PANEL APPLICATIONS SET FORTH IN IBC SECTION 2308 OR IRC SECTION R602.
5) REQUIRE A MINIMUM 6 in. CURB OR STEMWALL WIDTH
6) CONCRETE EDGE DISTANCE FOR ANCHORS MUST COMPLY WITH ACI 318-19 Section 17.9.2, ACI 318-14 Section 17.7.2 (ACI 318-11 Section D.8.2).

FIGURE 5—EQUATION FOR TENSION UPLIFT WITH ADDED AXIAL LOAD

The expressions listed below must be used to determine anchor uplift or tension (T) for panels subjected to combined allowable in-plane lateral shear and a concurrently applied axial compression load (P_{add}).

Hardy Frame® Panels

HFX 9x : $T = 8.6f_c' - \sqrt{74.4f_c'^2 - 1.19f_c'(5.5P_{add} + 2VH)} - P_{add}$

HFX 12x : $T = 12.2f_c' - \sqrt{148.8f_c'^2 - 1.19f_c'(8.50P_{add} + 2VH)} - P_{add}$

HFX 15x : $T = 14.7f_c' - \sqrt{216.9f_c'^2 - 1.19f_c'(9.75P_{add} + 2VH)} - P_{add}$

HFX 18x : $T = 18.3f_c' - \sqrt{334.8f_c'^2 - 1.19f_c'(12.8P_{add} + 2VH)} - P_{add}$

HFX 21x : $T = 21.9f_c' - \sqrt{478.1f_c'^2 - 1.19f_c'(15.8P_{add} + 2VH)} - P_{add}$

HFX 24x : $T = 25.4f_c' - \sqrt{647.0f_c'^2 - 1.19f_c'(18.8P_{add} + 2VH)} - P_{add}$

Variable	Description/Units
f_c'	Concrete Compression stress / psi
V	Shear Load / lb.
H	Panel Height / in.
P_{add}	Vertical Load / lb.
T	Tension Load / lb.

FIGURE 6—EXAMPLE 1: COMBINE HFX-SERIES PANELS OF DIFFERENT STIFFNESS IN THE SAME WALL LINE BY PROPORTIONING LOADS.
2024, 2021, 2018, 2015 AND 2012 IBC

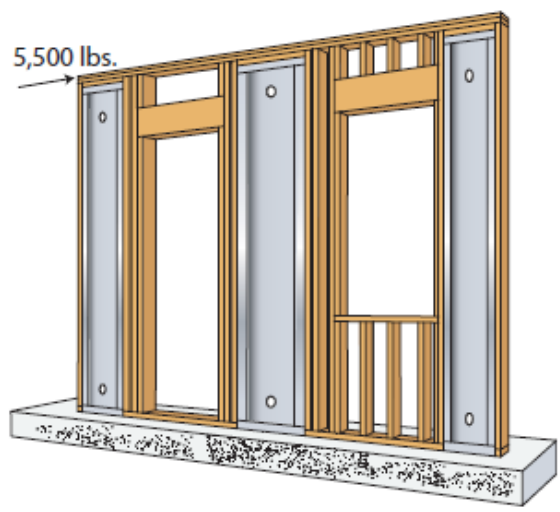

Given:
Seismic loading
Concrete f'c = 2,500 psi
Design Shear Load = 5,500 lbs.
Axial Load = 1,000 lbs (dead plus live) per Panel
Wall height = 8'1"

Try: (2) HFX-12x8 with (1) HFX-18x8

Step 1: Calculate Stiffness (k)
For HFX12x8: Allowable Shear from Table 1.1A (HS grade HD) = 1,480 lbs
Corresponding Drift = 0.225 in
Stiffness (k_{12}) = 1,480 / 0.225 = 6,578 lbs/in

For HFX18x8: Allowable Shear from Table 1.1A (HS grade HD) = 3,740 lbs
Corresponding Drift = 0.312 in
Stiffness (k_{18}) = 3,740 / 0.312 = 11,987 lbs/in

Total Stiffness (k_{total}) = $k_{12} + k_{12} + k_{18}$ = 6,578 lbs/in + 6,578 lbs/in + 11,987 lbs/in = 25,143 lbs/in

Step 2: Calculate Relative Stiffness
k_{12} / k_{total} = 6,578 / 25,143 = 0.26
k_{18} / k_{total} = 11,987 / 25,143 = 0.48

Step 3: Check Load Distribution
HFX-12x8 = 0.26 x 5,500 lbs = 1,430 lbs < 1,480 lbs **OK**
HFX-18x8 = 0.48 x 5,500 lbs = 2,640 lbs < 3,740 lbs **OK**

For **SI:** 1 inch = 25.4 mm, 1 foot = 304.8 mm, 1 lb = 4.45 N, 1 psi = 6.89 kPa.

EXAMPLE 2: HFX-SERIES PANELS TWO-STORY DESIGN

Given:
Wind loading, Concrete f'c = 2,500 psi
1st Floor Wall Height: 9' 1"
Floor System Depth: 1' 0"
2nd Floor Wall Height: 8' 1"
Shear Load at 1st Floor (V_1): 1,000 lbs Wind
Shear Load at 2nd Floor (V_2): 1,000 lbs Wind
Shear Load at Foundation (V_{Base}): 2,000 lbs Wind (1,000 lbs + 1,000 lbs)
No Additional Vertical Loads

Step 1. Select
HFX-18x8 (STD Rods) at Second Floor: Allowable Wind Shear from Table 1.3A = 2,740 lbs
HFX-18x9 (HS Rods) at First Floor: Allowable Wind Shear from Table 1.1A = 3,310 lbs

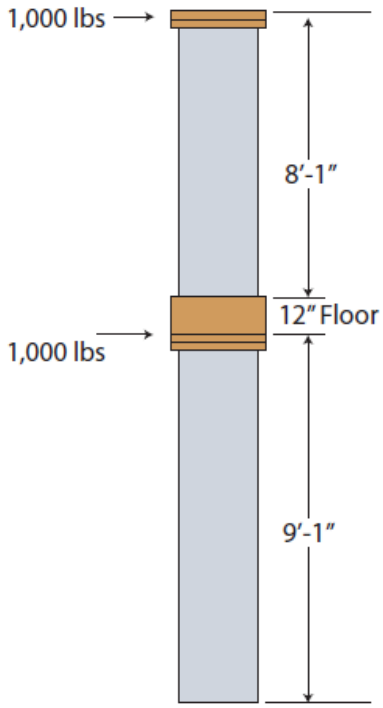

Step 2. Check Shear
A) Shear Load at 2nd Floor (V_2)
HFX-18x8 Allowable Shear = 2,740 lbs > 1,000 lbs **OK**

B) Shear Load at the Foundation (V_{Base})
HFX-18x9 Allowable Shear = 3,310 lbs > 2,000 lbs **OK**

Step 3. Check Moment
A) Calculate Cumulative Overturning Moment of the Stacked Panels
Second Floor @ 18' 2" = 218" x 1000 lbs =218,000 in-lbs
First Floor @ 9' 1" = 109" x 1000 lbs =109,000 in-lbs
Total Overturning Moment = 327,000 in-lbs

B) Calculate Moment Capacity of the Stacked Panels
Use the First Floor Panel Moment Capacity as the Capacity of the Stacked Panels
Allowable Moment = Allowable Shear x Panel Height = 3,310 lbs x 104.25" = **345,068 in-lbs**

C) Check Cumulative Overturning Moment
345,068 in-lbs (Capacity) > 327,000 in-lbs (Cumulative Moment) **OK**

Step 4. Foundation Anchor Tension

$$T = \frac{Calculated\ Overturning\ Moment}{Allowable\ Moment} x\ Uplift\ at\ Allowable\ Moment$$

$$T = \frac{327{,}000\ in - lbs}{345{,}068\ in - lbs} x\ 39{,}477\ lbs = 37{,}410\ lbs$$

For **SI:** 1 inch = 25.4 mm, 1 foot = 304.8 mm, 1 lb = 4.45 N, 1 psi = 6.89 kPa.

DIVISION: 05 00 00—METALS
Section: 05 40 00—Cold-Formed Metal Framing

DIVISION: 06 00 00—WOOD, PLASTICS AND COMPOSITES
Section: 06 12 19—Shear Wall Panels

REPORT HOLDER:

MITEK® INC.

EVALUATION SUBJECT:

***HARDY FRAME®* SHEAR WALL PANEL COMPONENTS**

1.0 REPORT PURPOSE AND SCOPE

Purpose:

The purpose of this evaluation report supplement is to indicate that ***Hardy Frame®*** Shear Wall Panel Components, described in ICC-ES evaluation report ESR-2089, have also been evaluated for compliance with the codes noted below as adopted by the Los Angeles Department of Building and Safety (LADBS).

Applicable code editions:

- 2026 *City of Los Angeles Building Code* (LABC)
- 2026 *City of Los Angeles Residential Code* (LARC)

2.0 CONCLUSIONS

The ***Hardy Frame®*** Shear Wall Panel Components, described in Sections 2.0 through 7.0 of the evaluation report ESR-2089, comply with LABC Chapters 19, 22 and 23, and LARC, and are subjected to the conditions of use described in this report.

3.0 CONDITIONS OF USE

The ***Hardy Frame®*** Shear Wall Panel Components, described in this evaluation report supplement must comply with all of the following conditions:

- All applicable sections in the evaluation report ESR-2089.
- The design, installation, conditions of use and labeling are in accordance with the 2024 *International Building Code®* (IBC) or 2024 *International Residential Code®* (IRC) provisions, as applicable, noted in the evaluation report ESR-2089.
- The design, installation and inspection are in accordance with additional requirements of LABC Chapters 16, 17, and 93, as applicable.
- Under the LARC, an engineered design in accordance with LARC Section R301.1.3 must be submitted.
- When ***Hardy Frame®*** Shear Wall Panel Components described in this evaluation report supplement are used in line with other types of lateral-force-resisting systems, only one system type shall be considered as the lateral resistance element, except where approved by LADBS on a case-by-case basis.
- Braced wall panel provisions in Section 4.2 of the evaluation report ESR-2089 are replaced with the following: When braced wall panels are required by Section 2308 of the LABC, ***Hardy Frame®*** Panel and ***Hardy Frame®*** Brace Frame can be used only if engineering calculations are provided.
- The seismic design provisions for hillside buildings referenced in LABC Section 2301.1 have not been considered and are outside of the scope of this supplement.

This supplement expires concurrently with the evaluation report, reissued September 2025 and revised July 2026.

ICC-ES Evaluation Reports are not to be construed as representing aesthetics or any other attributes not specifically addressed, nor are they to be construed as an endorsement of the subject of the report or a recommendation for its use. There is no warranty by ICC Evaluation Service, LLC, express or implied, as to any finding or other matter in this report, or as to any product covered by the report.

Copyright © 2026 ICC Evaluation Service, LLC. All rights reserved.

DIVISION: 05 00 00—METALS
Section: 05 40 00—Cold-Formed Metal Framing

DIVISION: 06 00 00—WOOD, PLASTICS AND COMPOSITES
Section: 06 12 19—Shear Wall Panels

REPORT HOLDER:

MITEK® INC.

EVALUATION SUBJECT:

***HARDY FRAME®* SHEAR WALL PANEL COMPONENTS**

1.0 REPORT PURPOSE AND SCOPE

Purpose:

The purpose of this evaluation report supplement is to indicate that the ***Hardy Frame®*** Shear Wall Panel Components, described in ICC-ES evaluation report ESR-2089, have also been evaluated for compliance with the codes noted below.

Applicable code editions:

- 2025 *California Building Code* (CBC)

For evaluation of applicable chapters adopted by the California Office of Statewide Health Planning and Development (OSHPD) AKA: California Department of Health Care Access and Information (HCAI) and the Division of State Architect (DSA), see Sections 2.1.1 and 2.1.2 below.

- 2025 *California Residential Code* (CRC)

2.0 CONCLUSIONS

2.1 CBC:

The ***Hardy Frame®*** Shear Wall Panel Components, described in Sections 2.0 through 7.0 of the evaluation report ESR-2089, comply with CBC Chapters 19, 22 and 23, provided the design and installation are in accordance with the 2024 *International Building Code®* (IBC) provisions, as applicable, noted in the evaluation report and the additional requirements of CBC Chapters 16 and 17, as applicable.

2.1.1 OSHPD: The applicable OSHPD Sections and Chapters of the CBC are beyond the scope of this supplement.

2.1.2 DSA: The applicable DSA Sections and Chapters of the CBC are beyond the scope of this supplement.

2.2 CRC:

The ***Hardy Frame®*** Shear Wall Panel Components, described in Sections 2.0 through 7.0 of the evaluation report ESR-2089, comply with the CRC, provided the design and installation are in accordance with the 2024 *International Residential Code®* (IRC) provisions, as applicable, noted in the evaluation report.

This supplement expires concurrently with the evaluation report, reissued September 2025 and revised July 2026.

ICC-ES Evaluation Reports are not to be construed as representing aesthetics or any other attributes not specifically addressed, nor are they to be construed as an endorsement of the subject of the report or a recommendation for its use. There is no warranty by ICC Evaluation Service, LLC, express or implied, as to any finding or other matter in this report, or as to any product covered by the report.

Copyright © 2026 ICC Evaluation Service, LLC. All rights reserved.

DIVISION: 05 00 00—METALS
Section: 05 40 00—Cold-Formed Metal Framing

DIVISION: 06 00 00—WOOD, PLASTICS AND COMPOSITES
Section: 06 12 19—Shear Wall Panels

REPORT HOLDER:

MITEK® INC.

EVALUATION SUBJECT:

HARDY FRAME® SHEAR WALL PANEL COMPONENTS

1.0 REPORT PURPOSE AND SCOPE

Purpose:

The purpose of this evaluation report supplement is to indicate that the ***Hardy Frame®*** Shear Wall Panel Components, described in ICC-ES evaluation report ESR-2089, have also been evaluated for compliance with the codes noted below.

Applicable code editions:

- 2026 and 2023 *Florida Building Code—Building*
- 2026 and 2023 *Florida Building Code—Residential*

2.0 CONCLUSIONS

The ***Hardy Frame®*** Shear Wall Panel Components, described in Sections 2.0 through 7.0 of ICC-ES evaluation report ESR-2089, comply with the *Florida Building Code—Building*, and the *Florida Building Code—Residential*. The design requirements shall be determined in accordance with the *Florida Building Code—Building* or the *Florida Building Code—Residential,* as applicable. The design and installation requirements noted in ICC-ES evaluation report ESR-2089 for the 2024 and 2021 *International Building Code®* meet the requirements of the *Florida Building Code—Building* or the *Florida Building Code—Residential,* as applicable, with the following conditions:

- The ***Hardy Frame®*** Shear Wall Panel Components, described in Sections 2.0 through 7.0 of ICC-ES evaluation report ESR-2089, comply with the *Florida Building Code—Building* and the *Florida Building Code—Residential*, including the corresponding and superseded provisions of ASCE/SEI 7-22.
- For use within 3,000 feet of a saltwater coastline, fasteners and connectors must comply with Section 1711 and Table 1711.1 of the 2026 *Florida Building Code—Building* or Section R332 and Table R332.1 of the 2026 *Florida Building Code—Residential*, as applicable.

Use of the ***Hardy Frame®*** Shear Wall Panel Components, have also been found to be in compliance with the High-Velocity Hurricane Zone provisions of the *Florida Building Code—Building*, and the *Florida Building Code—Residential*.

For products falling under Florida Rule 61G20-3, verification that the report holder's quality assurance program is audited by a quality assurance entity approved by the Florida Building Commission for the type of inspections being conducted is the responsibility of an approved validation entity (or the code official when the report holder does not possess an approval by the Commission). Florida Rule 61G20-3 is appliable to products and/or systems which comprise the building envelope and structural frame for compliance with the structural requirements of the Florida Building Code.

This supplement expires concurrently with the evaluation report, reissued September 2025 and revised July 2026.

ICC-ES Evaluation Reports are not to be construed as representing aesthetics or any other attributes not specifically addressed, nor are they to be construed as an endorsement of the subject of the report or a recommendation for its use. There is no warranty by ICC Evaluation Service, LLC, express or implied, as to any finding or other matter in this report, or as to any product covered by the report.

Copyright © 2026 ICC Evaluation Service, LLC. All rights reserved.